

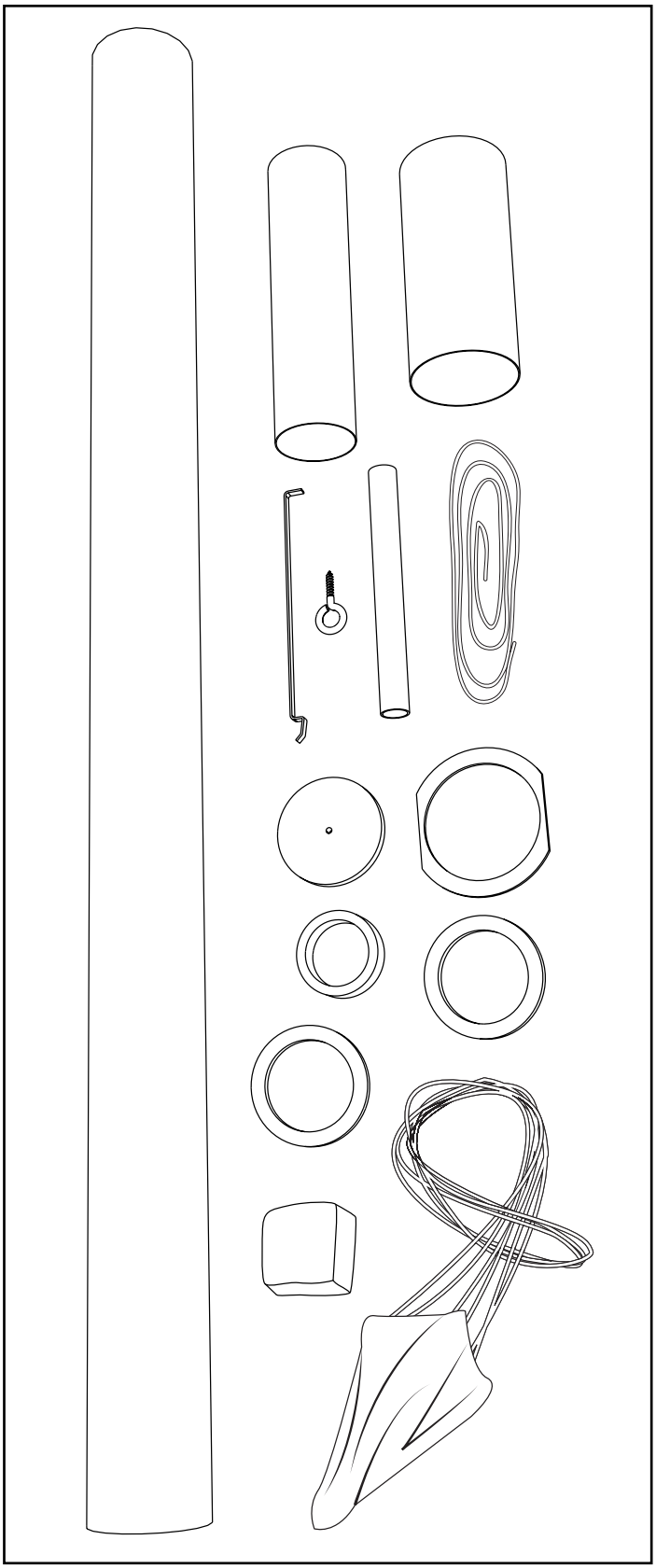

Kit #12111 **Made in USA**
Skill Level 4

V-2 Conversion Kit

Converts the Spacemonkey Models V-2/A4 Plastic Model Kit into a Flying Model Rocket

Parts List

P/N	Item Name	Qty
10091	AT-24/3.75”	1
10128	AT-33/17.75 (LC)	1
12358	CBD-33mm ⅛” Plywood (single)	1
13016	Coupler AC-33 (single)	1
13031	CR-18/24 (single)	1
13301	CR-24/33 ⅛” Plywood (single)	2
13279	CR-33 V-2 (LC)	1
13056	¼” Launch Lug	1
24043	Crimped Engine Hook	1
29520	300# Kevlar X 8 ft	1
29602	Clay Nose Wt (⅓ stick) {30 grams}	1
29624	Wood Screw Eyebolt Size 9	1
29116	24” Plastic chute	1
31114	Instruction Sheet A	1
31115	V-2 Launching Instructions	1
47124	Clear Plastic Bag 6X24X2mil	1

Supplies Needed

Spacemonkey Models V-2/A4 Plastic Model Kit
Pencil
Hobby Knife
Razor Saw
Wood Dowel or Stick (to spread glue inside tube)
Ruler
Sand Paper (220 and 400 Grit)
Wood Glue
Super Glue (Thick Viscosity)
Rocket engine to push in the engine block

The V-2 Conversion kit is another fine product from:

Apogee Components
Colorado Springs, Colorado USA
web site: www.ApogeeRockets.com

Skill Level 3: Average Skills Needed

This conversion kit is designed for the Spacemonkey Models V-2/A4 plastic model kit. It allows the rocket to be flown with 24mm diameter model rocket motors.

Changing a static model into a flying model is called “plastic model conversion” (PMC) by the National Association of Rocketry (NAR). There is even a PMC contest event that you can fly this rocket in.

The Spacemonkey Models V-2/A4 rocket is generally easy to convert to model rocket power because of the large blow-molded body, and because the model has the nose cone separate towards the top of the body which leaves a lot of room for the parachute.

This conversion kit should be assembled prior to the assembly of the plastic model rocket. That way when you’re ready to add the fins and the other delicate details, there will be less of a chance to damage the plastic parts.

V-2 Conversion Kit Assembly

☐ Step 1 - Mark the short white body tube 2-¼ inches (57mm) from one end. Using a hobby knife make a slit at the line about 1/8 inch (3mm) wide. Insert the end of the engine hook into the slit as shown.

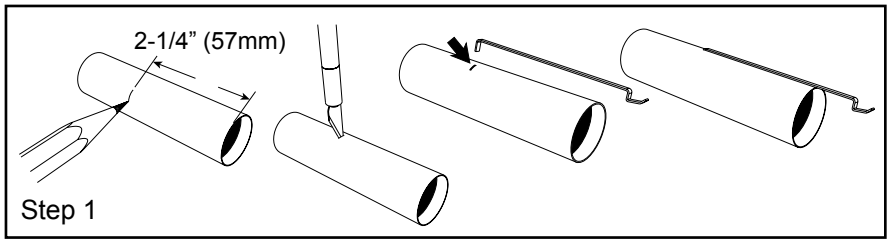

☐ Step 2 - Take the green ring and glue it inside the front end of the tube using wood glue. You can use a rocket engine to push it in until it butts against the metal engine hook tang on the inside of the tube. Remove the rocket engine casing immediately, and wipe away the excess glue on both sides of the engine block. Allow the glue time to dry.

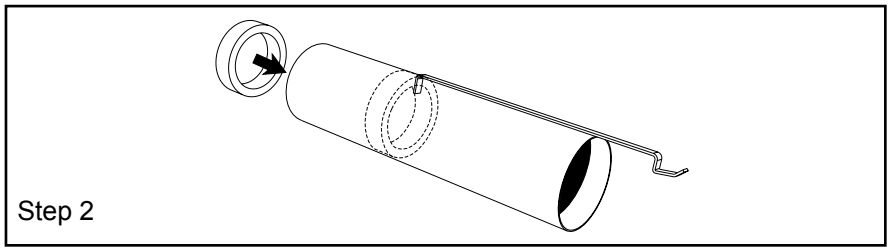

☐ Step 3 - Mark the engine mount tube 1/2 inch (13mm) from the end as shown. Glue one of the wooden centering rings over the tube and engine hook at this line using wood glue. There is a small removable notch on the inside of the ring that slips over the engine hook.

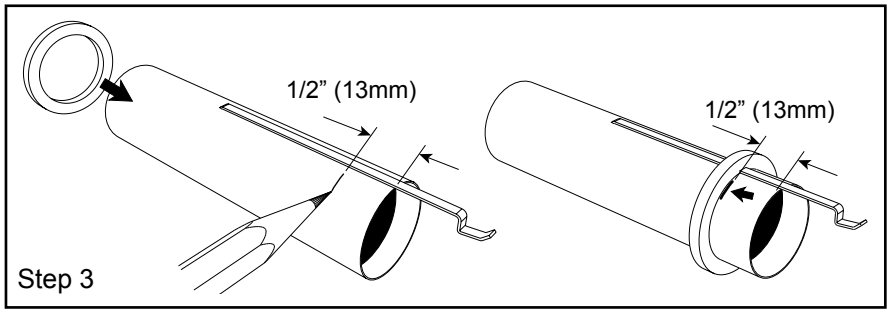

☐ Step 4 - Pass one end of the shock cord through the remaining wooden centering ring and tie the cord around the motor mount tube. Cinch the cord tight to the tube. Run a bead of wood glue around the forward end of the motor mount tube. Slip the ring onto the forward end of the motor mount tube so that the front edge of the ring is even with the end of the tube, and the shock cord is running in the pre-cut slot. Pull the cord so that the loop is tight up against the side of the centering ring. Apply glue fillets to both sides of the centering rings and allow to dry.

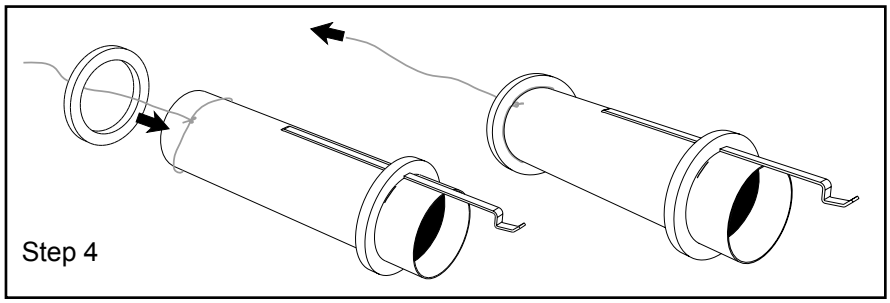

☐ Step 5 - Temporarily pass the shock cord through the motor mount and out the rear. This will keep it glue-free when gluing the engine mount into the tube. Using a wood dowel, apply wood glue 2-1/2 inches (63.5 mm) inside the aft end of the 17.75 inch long body tube. (NOTE: The aft end is the side that does not have the line around the perimeter.) Also put glue on the aft ring of the motor mount. Quickly and smoothly

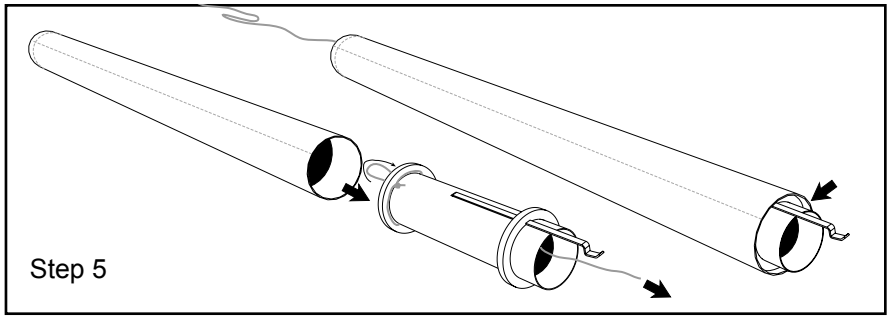

insert the motor mount tube into the aft end of the body tube SO THE BACK RING IS RECESSED AT LEAST ¼ INCH (6.5mm) INSIDE THE END OF THE TUBE. Also, the engine hook should NOT be in line with the line on the tube. When the glue is dry, pass the shock cord back through the motor mount, so that it comes out the front end of the rocket.

☐ Step 6 - Take the red tube coupler and place it on the plastic “aft nozzle insert” from the Spacemonkey Models V-2 kit. Do not glue it. Make sure it is straight on the nozzle insert. Draw a line on the plastic with a pencil, and remove the coupler tube.

☐ Step 7 - Using a razor saw, cut the top off the nozzle insert using the pencil line as a guide. Clean up the edge with sandpaper. The domed portion can be discarded.

☐ Step 8 - Mark the middle of the aft edge of the nozzle insert on the recessed portion as shown. Anywhere around the ring is fine, but this will now be the centerline of the fin.

☐ Step 9 - Test fit the nozzle insert into the back of the body tube from Step 5. The line you made in Step 8 should align with the pre-marked line on the outside of the body tube. Also make sure the tube is straight on the nozzle insert, and then glue it into place using thick super glue.

☐ Step 10 - Locate the laser-cut cardstock centering ring. The side with the line etched on it is the front side. Slide the ring over the body tube and onto the front end of the tube. The line on the ring should be aligned with the lengthwise etched line of the tube, and the front edge of the ring should be just behind the perimeter line. Do not glue it yet.

☐ Step 11 - This is a critical step, so be sure to understand what has to occur before you glue things into place. Slide the tube into the rear of the blow-molded tube from the plastic model kit. Refer to Step 7 of the instruction sheet that came with the Spacemonkey Models V-2/A4 kit in how the nozzle insert is aligned with the fin location of the blow molded tube. Looking from the front side of the blow molded tube, check to see if the paper centering ring is making good contact with the inside edge of the blow mold tube. When you are sure you understand how everything fits together, remove the parts and glue them together using thick super glue.

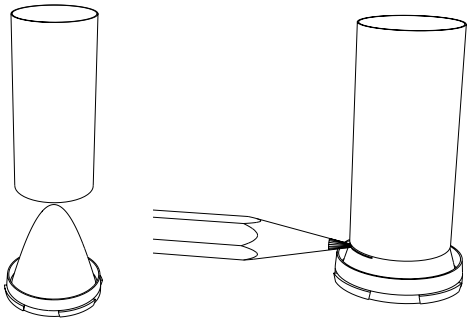
Step 6

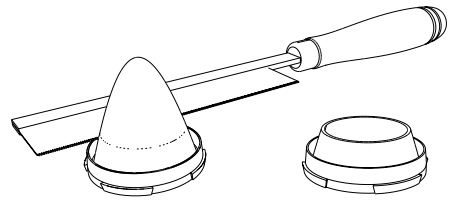
Step 7

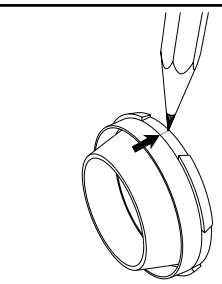
Step 8

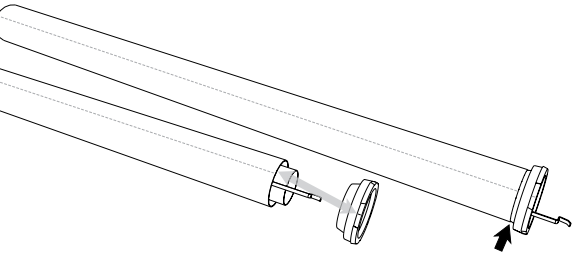
Step 9

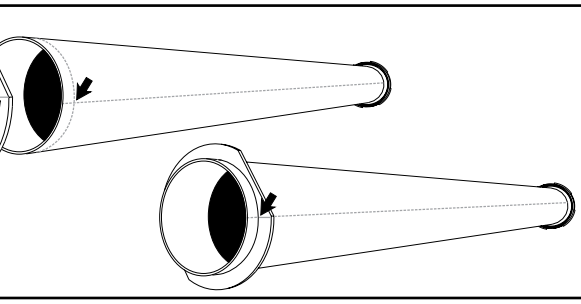
Step 10

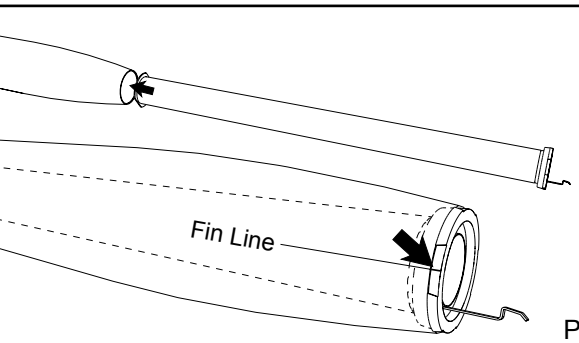

Step 11

☐ Step 12 - Screw and then glue the screw-eye into the wooden bulkhead disk using wood glue. Glue the assembly into one end of the red tube coupler. The disk should be just inside the end so that you can put glue fillets on both sides of the disk. Allow the glue to dry.

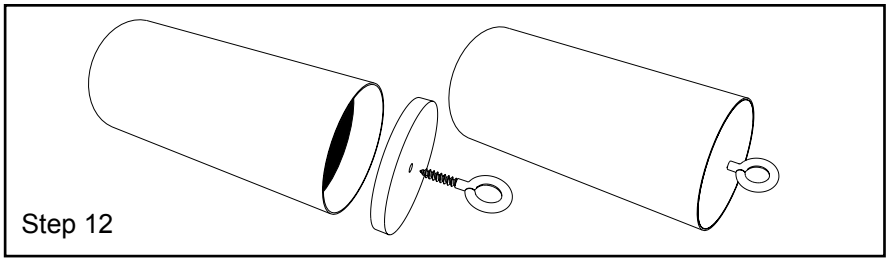
Step 12

☐ Step 13 (Optional) - Using a hobby knife, cut a series of v-notches into the front end of the tube coupler from the previous step. Because the edge will bend inward and conform better to the inside of the nose cone, this will make a stronger glue joint when the coupler is installed into the nose cone in the next step.

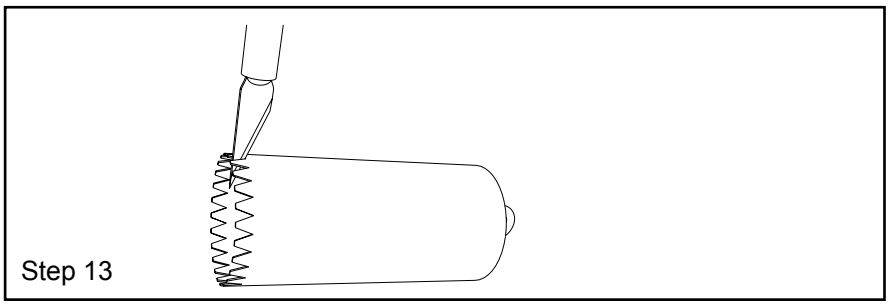
Step 13

☐ Step 14 - Place the clay nose weight into the front of the plastic nose cone from the V-2 kit. Glue the coupler tube into the nose using thick super glue. Make sure the coupler is straight inside the nose cone. While the glue is still wet, you can place the other end of the coupler onto the blow mold rocket tube to ensure the alignment is straight. Allow the glue time to harden.

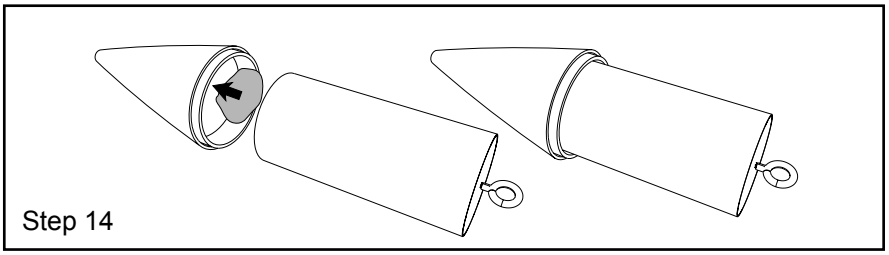
Step 14

☐ Step 15 - Tie the shock cord to the screw eye on the base of the nose cone.

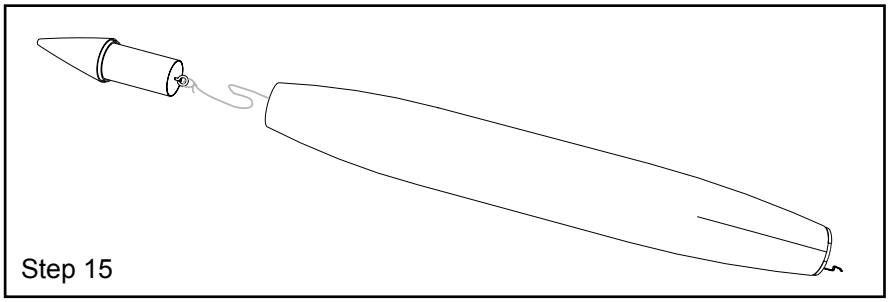
Step 15

☐ Step 16 - Holding the parachute at the center of its top, pull the lines together to even up the ends. Thread the three looped lines through the screw eye on the base of nose cone. Take the apex of the parachute and pull it through all three string loops at the same time and then pull to tighten the knot. This securely attaches the parachute to the rocket.

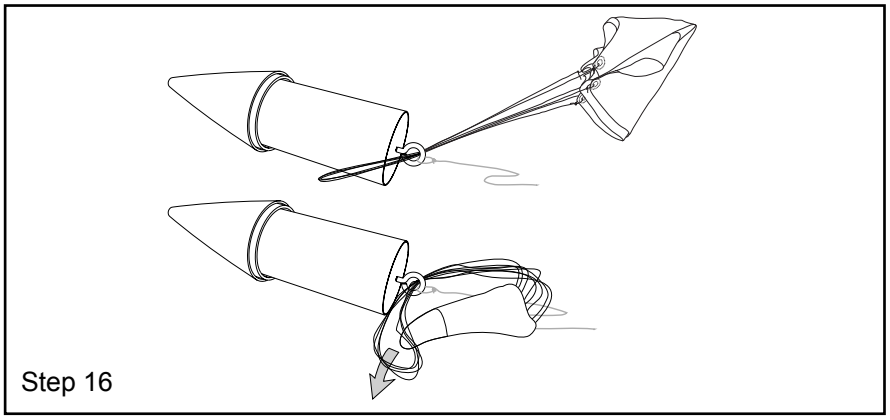
Step 16

☐ Step 17 - Draw a line down the side of the cylindrical portion of the blow molded part of the rocket. This line should not be in line with the fin lines on the bottom of the tube, and should be straight along the centerline of the rocket.

Glue the launch lug to the tube using thick super glue. The location is not important, as long as it is on the straight part, and not the tapered portion of the rocket body.

At this point, you can complete and paint the V-2/A4 rocket using the instruction sheet from Spacemonkey Models.

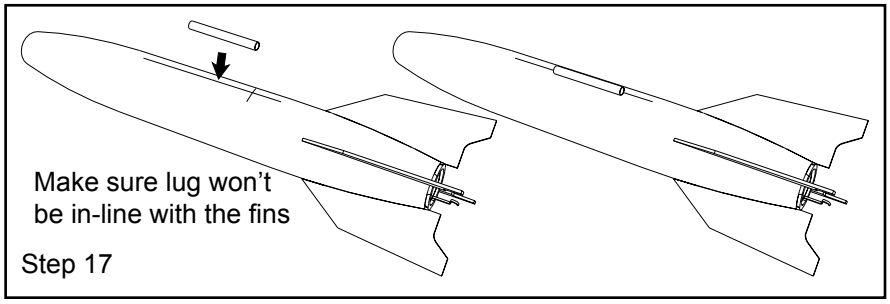

Step 17

V-2 Launching Instructions

Launch Supplies Needed

To launch your rocket you will need the following supplies:
- A model rocket launching system
- Flame resistant recovery wadding
- Recommended Rocket Engines: C11-3, D12-5

Rocket Preflight

☐ A. Crumple and insert 5 sheets of recovery wadding into the body tube.

☐ B. Fold the parachute and insert it into the tube with the shock cord.

☐ C. Insert the rocket motor into the aft end of the rocket.

☐ D. Insert and secure the engine igniter as directed on the package the engines came with.

Countdown and Launch Procedure

☐ Fly your rocket on a large field that isn't near any power lines, trees, or low flying aircraft; The larger the field, the greater your chances of recovering your rocket. The launch area around the pad must be free of dry weeds and brown grass. Launch only during calm weather with very little or no wind and good visibility.

10. Remove the safety key from the launch controller.
9. Slide the launch lugs over the launch rod to place the rocket on the pad. The rocket should slide freely over the rod.
8. Attach the micro-clips to the igniter. The clips must not touch each other or the metal blast deflector.
7. Stand back from your rocket as far as the launch wire allows (at least 5 meters - 15 feet).
6. Insert the safety key to arm the launch system. The light (or buzzer) on the controller should come on.

Give a loud countdown 5 ... 4 ... 3 ... 2 ... 1 ... LAUNCH!

Push and hold the button until the engine ignites. Then remove the safety key and place the safety cap on the launch rod.

Misfire Procedure

Occasionally the igniter will burn, but the motor will fail to ignite. If this happens, the cause is that the pyrogen on the igniter was not in contact with the engines propellant. When an ignition failure occurs, remove the safety key from the launch controller and wait 60 seconds before approaching the rocket. Remove the old igniter from the engine and install a new one. Make sure that the igniter is insert fully into the engine and touches the propellant. Secure the igniter as directed on the engine package and repeat the countdown and launch procedure.

Always follow the NAR* Model Rocket Safety Code when launching model rockets.

*National Association of Rocketry

**Kevlar® is a brand name of E.I. DuPont for their selection of aramid fibers. Only DuPont makes Kevlar®

Need parts or accessories to go along with this kit?

Go online and order at www.ApogeeRockets.com or call us and order at **719-535-9335.** We're available M-F: 9 am to 5 pm MST.

Recommended Items:	Weblink
Rocket Engines	www.ApogeeRockets.com/rocket_motors
Launch Controllers	www.ApogeeRockets.com/launch_controllers
Launch Pad	www.ApogeeRockets.com/Launch_Pads