ROCKET BOOSTED GLIDERS

vertical flight analysis

Geoffrey A. Landis
C Division
NAR 14193

Submitted at the
Twenty Fourth
National Association of Rocketry
Annual Meet
August 9-13 1982

Copyright 1982
by Geoffrey A. Landis
All rights reserved

R&D Report from http://nar.org National Association of Rocketry

ROCKET BOOSTED GLIDERS
vertical flight analysis

Geoffrey A. Landis
NAR 14193

ABSTRACT

An analysis of the boost trajectory of a conventional B/G is made, using elementary physics and some simple aerodynamics. An equation is derived which allows calculation of the curvature of the boost trajectory as a function of the parameters of the B/G. For the case of coast (engine-off), the curvature is independent of velocity (thus, the trajectory is circular). If the curvature of the trajectory is low enough, the trajectory is effectively straight. For the case of engine-on flight, the trajectory is dependent on both velocity and thrust. At the beginning of flight, a nose-down trajectory is expected due to the domination of the thrust term. As velocity increases, the engine-on trajectory will asymptotically approach the coast trajectory.

R&D Report from http://nar.org National Association of Rocketry

CONTENTS

Abstract	–
Contents and List of Figures	1
Introduction and Purpose	2
Analysis	4
Example	19
Limitations of Analysis	21
Conclusions	25
Acknowledgements	26
References	27
Appendix I: List of Symbols	27
Appendix II: Basic Program	29

LIST OF FIGURES

Figure 1. Typical Boost/glider

Figure 2. Rotational moments on a glider due to wing, tail, and engine during boost

Figure 3. Reference distances of engine moment, wing moment, and tail moment

Figure 4. Curve of Lift coefficient versus angle of attack for typical airfoil.

Figure 5. Comparison of Barrowman and Hoerner formulae for "a".

Figure 6. Trajectory of B/G with and without gravity term, for two CG positions.

R&D Report from http://nar.org National Association of Rocketry

INTRODUCTION AND PURPOSE

The theory of model rocket flight is reasonably complete. One dimensional altitude theory has been developed by Fehskens and Malewicki; and extended into two dimensions by Caporasio; static stability theory was developed by Barrowman; dynamic stability by Mandell; and a method of analysis of drag developed by Bengen and by Gregorek. Other workers, including Kuechler, Miller, and Kelly, have elaborated the areas left out of these theories and improved upon the approximations used.

There has to date been no theory of boost/glider (B/G) flight comparable to this body of work on the flight of conventional rockets. Although the gliding phase of B/G flight has been covered by several workers [1,2,3], including the author[4,5,6], there has not appeared in the model rocket literature even a qualitative analysis of the boost phase. This is probably the last remaining topic of model rocket flight yet devoid of a basic theory.

It is thus the purpose of this report to present a simple theory of B/G flight which will make boost/glider trajectories as easily understood as the work of Malewicki, Barrowman, Mandell, and the others have made the trajectories of conventional rockets.

R&D Report from http://nar.org National Association of Rocketry

In doing this, I have endeavored as far as possible to follow the injunction of Hoerner, from the introduction to reference 7:

> The point is to encourage the designers of airplanes (and similar contraptions) to think in terms of force, power, equilibrium, as the Wright Brothers, or men such as Ludwig Prandtl did. Instead of depending on the results of computer studies, the engineer should in many cases study the problem and conduct the necessary simple calculations to obtain answers. This is important as many of the computer programs are long and complex with only the initial programmer and the engineers involved able to understand the program, its limitations and results. By conducting his own calculations and knowing the many assumptions and empirical data, the background necessary to apply the computer programs is obtained with a much better understanding of the results.

R&D Report from http://nar.org National Association of Rocketry

ANALYSIS

One of the most interesting types of rocket is the "boost/glider", or "B/G", a rocket which boosts vertically into the air and glides down. The gliding flight of B/G's has been analysed in depth previously[1-6]. This project will focus on boost: the vertical portion of flight.

Modern B/G's come in two main types: fixed wing and flexwing. Flexwings are boosted in the folded state, and thus have the same boost characteristics as conventional rockets. Fixed wing B/G's, however, by their inherent assymmetry, have more complex boost characteristics. This will be the subject of this article.

The typical B/G which will be the subject of analysis is shown in figure 1. The engine pod above the wing powers the model on boost. This pod may then be dropped for glide ("pop-pod") or kept (as in rocket gliders). The analysis will be applicable to either configuration. Likewise, although not specifically noted in figure 1, the analysis will be applicable to most types of variable geometry gliders, including slide-wings, flop-wings, flap-wings, and variable-incidence-tails. Model types such as swing-wings and pivot (or "scissors") wings are <u>not</u> specifically covered by this analysis, and extension of this analysis to cover these model types, although possible, would necessarily be of limited accuracy.

A conventional rocket has no rotational forces on it during boost. The engine and fins are aligned with the axis of the model (if well built, anyway). In a boost/glider, the engine is normally mounted off-axis, to keep the engine from burning the wing. Wing lift and tail lift also contribute rotational moments to the model. Figure 2 shows these forces. Assuming the pod is mounted above the center of gravity (CG), the engine will always contribute a force tending to rotate the glider nose-down. Depending on the angle of attack of the model, though, the wing and tail lift could act in either direction.

R&D Report from http://nar.org National Association of Rocketry

You will note in figure 2 that the glider is shown as boosting at an angle to the airstream. This is generally the case with most boost/gliders. The glider does not point exactly into the direction of flight. The actual angle of attack is rarely as extreme as shown in the figure, though (typically it is only one or two degrees). In order to solve the boost trajectory, we must first determine the angle of attack.

The fundamental assumption I use to find the angle of attack is rotational equilibrium. This assumption is that the angle of attack of the vehicle will adjust itself so that the total rotational force ("moment") on the vehicle is zero. This assumption is known in physics as the "quasi-static" approximation.

In fact, due to inertia and damping, a glider does not instantaneously reach this angle of attack where moment is zero. These effects show up as a time delay in behavior and as oscillatory behavior about equilibrium. For the purposes of analysis, however, these effects are small and have negligible impact on trajectory.

To find the angle of attack, we sum the force moments acting on the model. The moment due to engine thrust is force times distance:

$$M_e = F_e x_e \qquad (1)$$

Here I use M to stand for moment, not mass! x_e is the height of the engine above the CG (see figure 3). (There is a list of symbols as an appendix to this report.) Vectorially, this is a cross-product: i.e. the x involved is the distance of the thrustline from the CG. Thus, for example, adding downthrust will not change the distance of the engine from the CG, but it will increase the distance of the thrustline from the CG (for top-pod models with CG behind the engine, anyway), and thus increase the moment.

R&D Report from http://nar.org National Association of Rocketry

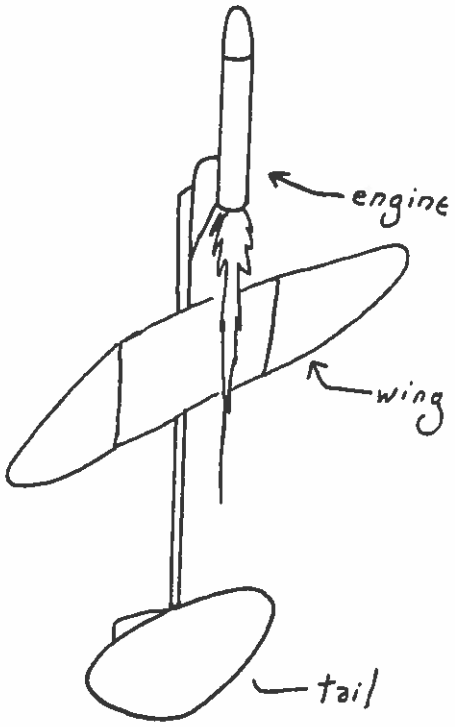

Figure 1. Typical Boost/glider

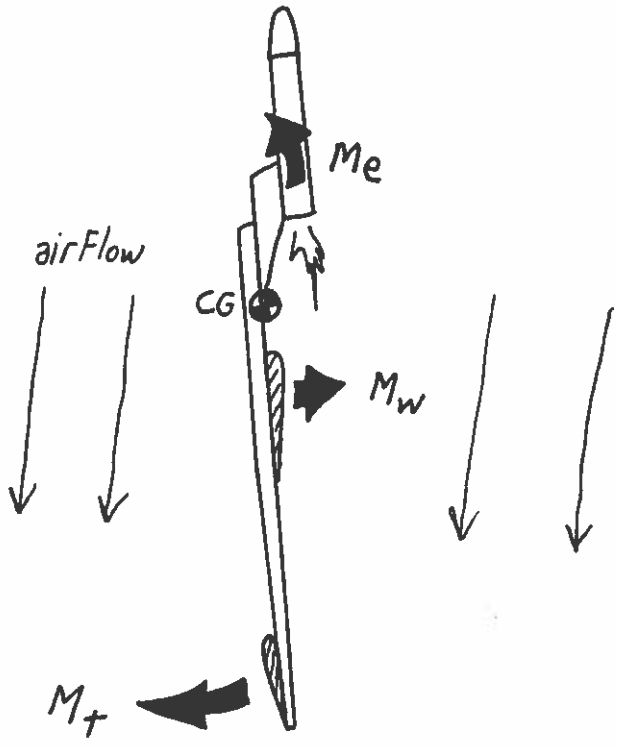

Figure 2. Rotational moments on a glider due to wing, tail, and engine during boost

R&D Report from http://nar.org National Association of Rocketry

The moments due to wing and tail lift are also computed as force times distance. In this case, the force depends on the angle of attack. At low angles of attack, the lift on a wing is very nearly proportional to the angle. Figure 4 shows a typical airfoil lift versus angle of attack curve. For a non-symmetrical airfoil, as most B/G's use, lift is proportional to the angle of attack plus the airfoil "zero lift angle":

$$F_w = \tfrac{1}{2}\rho a_w A_w v^2 (\alpha + \alpha_w) \qquad (2)$$

The force on the tail (or "stabilizer") is proportional to the angle of the vehicle plus the tail zero lift angle:

$$F_t = \tfrac{1}{2}\rho a_t A_t v^2 (\alpha + \alpha_t) \qquad (3)$$

The tail zero lift angle includes the offset angle of the tail from the wing, which is called "incidence". Tail incidence is almost always a negative number.

Here the term "a" is defined to be the change in lift coefficient with angle of attack, or $dC_L/d\alpha$. (Don't confuse "a", $dC_L d\alpha$, with "A", area!) In aerodynamic "perfect inviscid flow" theory, for an infinite span wing a should be exactly 2 pi (for angles expressed in radians), or about 0.11 (for angles in degrees.) In fact, actual values of a are not this high, for two reasons. First, all real airfoils have a non-unity "efficiency"[7]. This efficiency is about 0.9 for typical airfoils. Second, airflow around the tips of the wing affects the a value, and thus a is a function of aspect ratio, only approaching its theoretical value for aspect ratios approaching infinity.

R&D Report from http://nar.org National Association of Rocketry

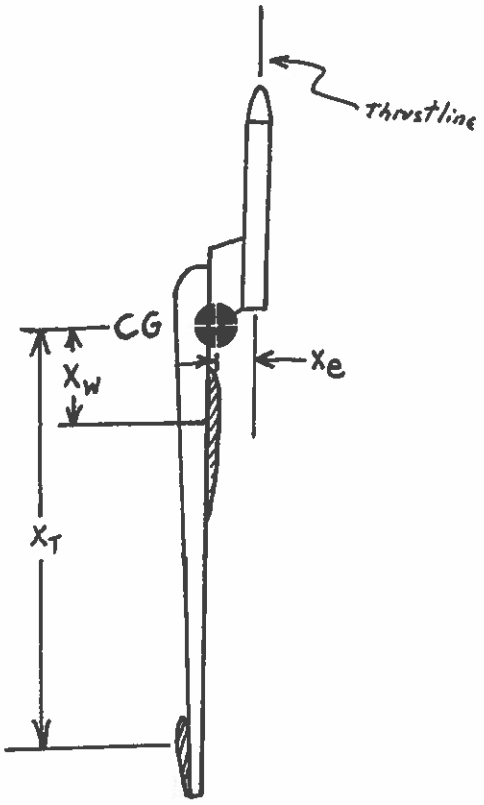

Figure 3. Reference distances of engine moment, wing moment, and tail moment

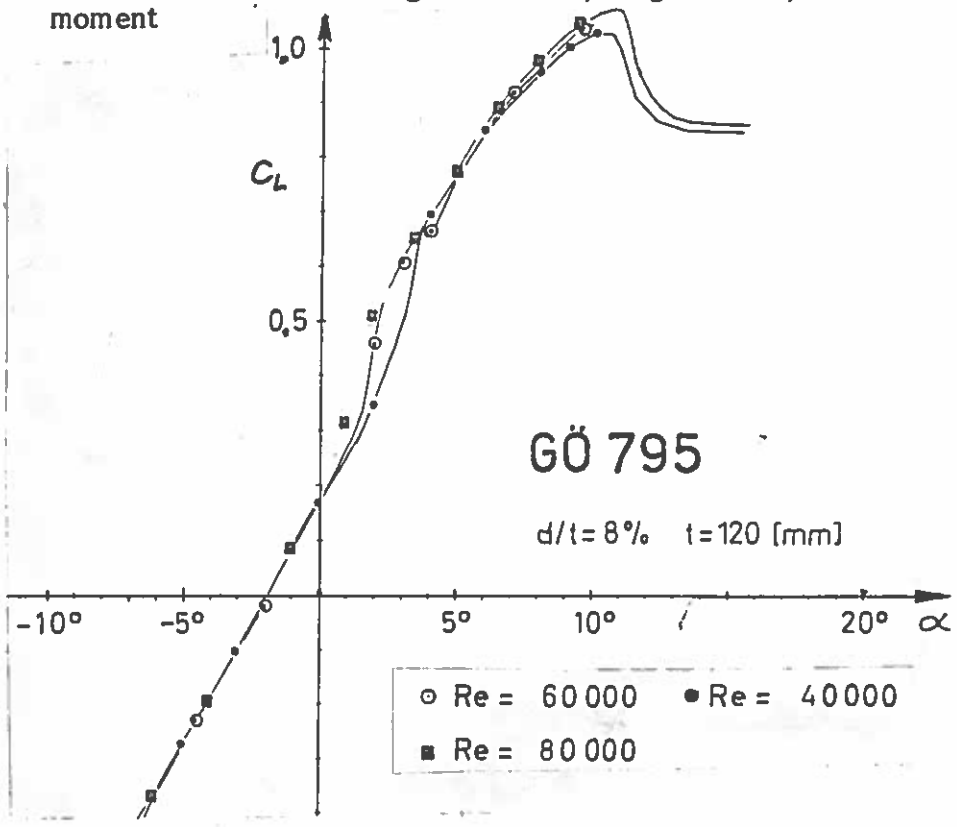

Figure 4. Curve of Lift coefficient versus angle of attack for typical airfoil. The slope of the linear portion of this curve is "a", and the x intercept is α_w.

R&D Report from http://nar.org National Association of Rocketry

Hoerner[7] combines these two effects into a formula for a:

$$a = \frac{1}{10 + \frac{19}{(AR)} + \frac{9}{(AR)^2}} \qquad (4a)$$

This and the next formula are for a in degrees.

It is interesting to compare this to the formula used by Barrowman in his formulae for center of pressure of a rocket[8]. Barrowman uses a to compute the force on the fins. Although he does not explicitly give a formula for a, by backtracking from his formula for force on the fins, we find Barrowman's formula for a to be:

$$a = \frac{(pi^2/360)\,(AR)}{1 + \mathrm{sqrt}(1+(AR^2/4))} \qquad (4b)$$

Barrowman's formula is compared to Hoerner's in figure 5. As is evident, for small aspect ratios the two formulae are in complete agreement. For large aspect ratios, the two formulae deviate. Barrowman's formula, in the limit of infinite aspect ratio, becomes the theoretical value of 0.11 predicted for perfect flow, while Hoerner's value converges towards his assumed efficiency of 0.9 times this. As can be seen from the table below, at large aspect ratios the Barrowman formula agrees with the Hoerner formula if the efficiency factor of 0.9 is deleted (labeled "Hoerner, theory" in figure 4). Since most rockets have fin aspect ratios under 4, the disagreement between Hoerner's and Barrowman's formulae is more apparent than real. For aspect ratios under 4, Hoerner and Barrowman are in good agreement.

A typical value of a for a B/G wing might be around 0.08 and for a stab, which has lower aspect ratio, around 0.06.

R&D Report from http://nar.org National Association of Rocketry

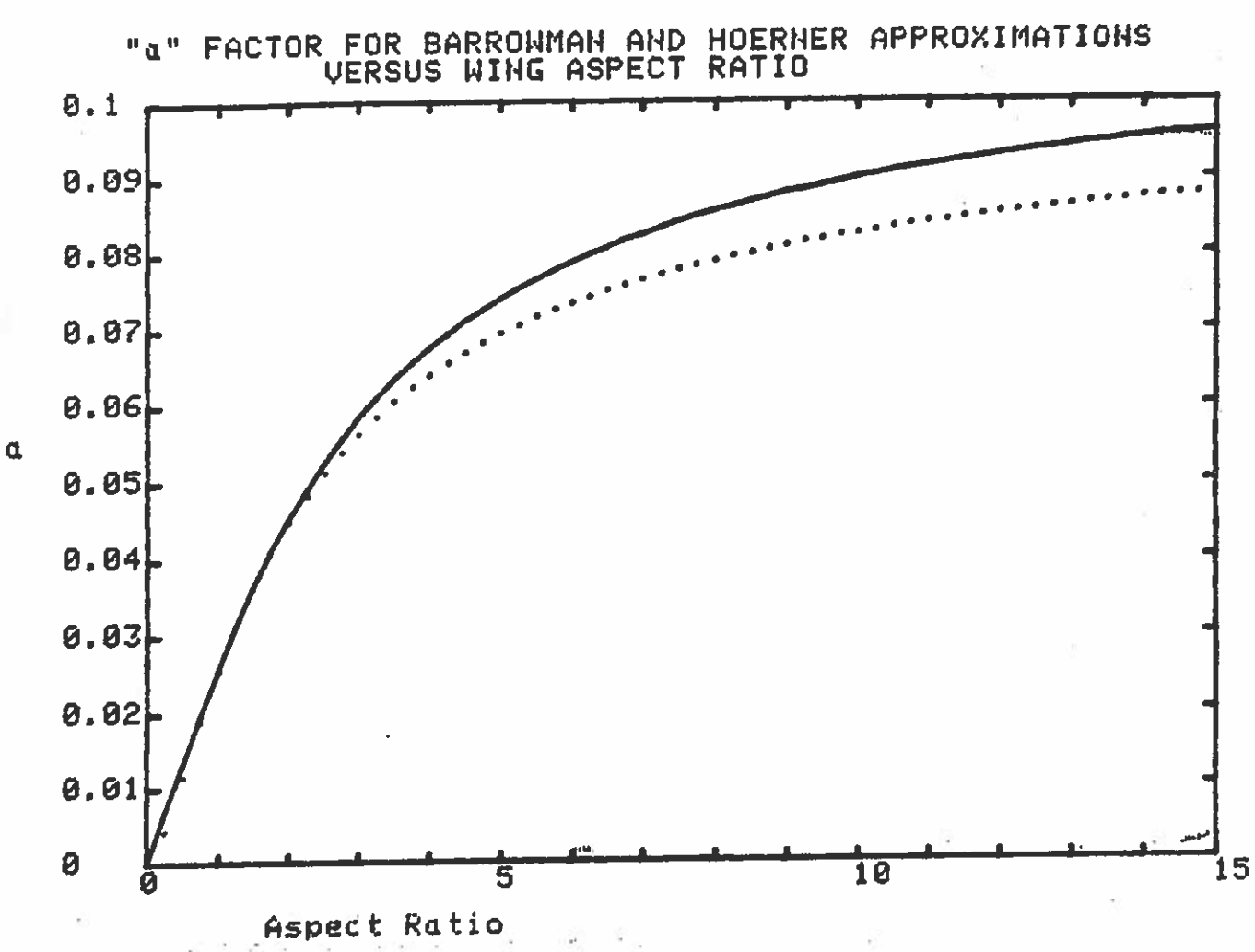

AR	Barrowman	Hoerner (empir)	Hoerner (theory)
0.25	0.007	0.004	0.005
0.50	0.014	0.012	0.013
0.75	0.020	0.019	0.021
1.00	0.026	0.026	0.028
1.25	0.031	0.031	0.035
1.50	0.037	0.037	0.040
1.75	0.041	0.041	0.045
2.00	0.045	0.045	0.049
2.25	0.049	0.048	0.053
2.50	0.053	0.051	0.056
3.00	0.059	0.057	0.062
5.00	0.074	0.070	0.076
7.00	0.083	0.077	0.084
9.00	0.088	0.081	0.089
11.00	0.092	0.084	0.092
13.00	0.094	0.086	0.095
15.00	0.096	0.088	0.096
17.00	0.098	0.089	0.098
19.00	0.099	0.090	0.099
21.00	0.100	0.091	0.100
23.00	0.101	0.092	0.101
25.00	0.101	0.092	0.101
27.00	0.102	0.093	0.102
29.00	0.102	0.093	0.102
31.00	0.103	0.094	0.103
33.00	0.103	0.094	0.103
35.00	0.104	0.095	0.104
37.00	0.104	0.095	0.104
39.00	0.104	0.095	0.104
41.00	0.104	0.095	0.105

Figure 5. Comparison of Barrowman and Hoerner formulae for "a".

R&D Report from http://nar.org National Association of Rocketry

The total moments are these forces times the appropriate distances from the CG:

$$M_w = F_w x_w \tag{5}$$

$$M_t = F_t x_t \tag{6}$$

X_w and x_t are the distance from the quarter chord of the wing or stab to the CG, as shown in figure 6. If the wing is positioned ahead of the CG, x_w will be negative.

For the total moment, we sum these terms. The total we have said must equal zero:

$$M_{total} = M_e + M_w + M_t = 0 \tag{7}$$

We can solve this for the angle of attack:

$$\alpha = -\frac{\frac{F_e x_e}{} - (a_w A_w x_w \alpha_w + a_t A_t x_t \alpha_t)}{(a_w A_w x_w + a_t A_t x_t)} \tag{8}$$

From this we note several things. First, the angle of attack when the engine is thrusting is usually negative (nose down), as shown in figure 2. For enough tail incidence it could be positive, but this would be unusual. Second, the faster the model goes, the less important the contribution of the engine thrust becomes. Last, when the engine cuts off (coast phase) the angle of attack becomes constant.

R&D Report from http://nar.org National Association of Rocketry

I will concentrate the next phase of analysis on the "engine-off" portion of flight for simplicity. Let us make a further simplifying assumption, that a_w and a_t have the same value, so we can cancel them from equation 8. We then have:

$$\alpha = - \frac{A_w x_w \alpha_w + A_t x_t \alpha_t}{A_w x_w + A_t x_t} \qquad (9)$$

Note that this is simply the weighted average of the wing and tail zero lift angles.

Given an angle of attack, how do we find the trajectory? First, we find the total side force on the vehicle using equations 2 and 3. For a vehicle with the CG ahead of the wing quarter chord, one of these two forces will always be negative, normally the tail force F_t. Adding the two forces together gives the total side force . The total side force is then:

$$F = \tfrac{1}{2}\rho v^2 \left[a_w A_w \left(\alpha_w - \frac{a_w A_w x_w \alpha_w + a_t A_t x_t \alpha_t}{a_w A_w x_w + a_t A_t x_t} \right) + a_t A_t \left(\alpha_t - \frac{a_w A_w x_w \alpha_w + a_t A_t x_t \alpha_t}{a_w A_w x_w + a_t A_t x_t} \right) \right] \qquad (10)$$

This can be simplified to:

$$F = \tfrac{1}{2}\rho v^2 \left[\frac{a_w A_w a_t A_t (x_t - x_w)(\alpha_w - \alpha_t)}{A_w a_w x_w + A_t a_t x_t} \right] \qquad (11)$$

R&D Report from http://nar.org National Association of Rocketry

The physics of moving bodies tells us that if there is a side force on a moving body, the resulting trajectory will be curved. We can now use a simple formula from physics to find the radius of the loop:

$$r = \frac{mV^2}{F} \tag{12}$$

In general, the motion of a glider during boost will be a loop. We can put the whole formula for loop radius together into one big expression,

$$r = \frac{m\,(A_w a_w x_w + A_t a_t x_t)}{\frac{1}{2}\rho a_w A_w a_t A_t\,(x_t - x_w)(\alpha_w - \alpha_t)} \tag{13}$$

Keep in mind that small loop radius means tight loops. Note that the loop radius depends inversely on the difference between the tail and wing zero-lift angles. The larger the difference between zero lift angles (eg, the greater the tail incidence), the tighter the loop. In a previous article by the author[5], it was shown that a difference between tail and wing C_L (hence, zero lift angle) is necessary for stability. There is thus a trade-off necessary between glide stability and straight boost.

Note also that coast loop radius is independent of velocity.

What does this mean? Do all B/G's fly in loops? Well, a B/G could be made to fly in a straight line if the denominator of (13) were exactly zero (eg., loop radius infinite). This will be true if the zero lift angles of the wing and tail are the same. Alternatively, loop radius will be infinite if $x_t = x_w$. For models with the stabilizer behind the wing, this is clearly impossible. So in real life, yes—boost/gliders do always fly in loops. But careful examination of equation 13 shows that the loops are extremely large, as long as the zero lift angles of the wing and tail are within a degree or so of one another. As long as the loop radius is larger than the altitude, the trajectory is effectively straight.

R&D Report from http://nar.org National Association of Rocketry

Now, what happens when the engine is thrusting? The loop calculated in equation 13 is a positive loop: nose up. As we saw from equation 8, the engine makes a negative (nose down) contribution to the angle of attack. If we work out equation 13 without having assumed that thrust was zero, we will see that thrust decreases the denominator of the expression. Thus, as thrust increases, the boost will first become straighter, then begin to loop the other way, nose down. The loop radius, however, is now a complicated function of the velocity and the thrust.

We can simplify the analysis of "engine-on" trajectory by introducing the concept of the glider "center of pressure", or "CP". The center of pressure is the location about which there is exactly zero aerodynamic rotational moment (for more detail on neutral point and center of pressure, see references 5 and 6). Thus, the location of the center of pressure, x_{cp}, is defined by the equation:

$$a_w A_w (x_w - x_{cp}) + a_t A_t (x_t - x_{cp}) = 0 \qquad (14)$$

Thus, we see that:

$$x_{cp} = \frac{a_w A_w x_w + a_t A_t x_t}{a_w A_w + a_t A_t} \qquad (15)$$

R&D Report from http://nar.org National Association of Rocketry

We note in passing that the CP can be used to write an alternative version of equation 11:

$$F = \tfrac{1}{2}\rho v^2 \left[\frac{(\alpha_w - \alpha_t)(x_w - x_t)}{x_{cp}\left(\frac{1}{a_w A_w} + \frac{1}{a_t A_t}\right)} \right] \qquad (16)$$

This formulation of f is exactly equivalent to that of equation 11. Note that, for models with wing area much larger than tail area, this reduces to:

$$F = \tfrac{1}{2}\rho\, v^2\, \frac{(\alpha_w - \alpha_t)(x_w - x_t)(a_t A_t)}{x_{cp}} \qquad (17)$$

and thus

$$r = \frac{m\, X_{cp}}{\tfrac{1}{2}\rho\, (\alpha_w - \alpha_t)(x_w - x_t)(a_t A_t)} \qquad (18)$$

R&D Report from http://nar.org National Association of Rocketry

We have assumed that both the wing force and the tail force are linear in angle of attack (this was implicit in equations 2 and 3). We will now consider the engine force as a perturbation about the equilibrium angle of attack found in equation 9. The engine force establishes a moment about the CG as calculated by equation 9, and thus to satisfy our assumption of rotational equilibrium, there must be an equal and opposite aerodynamic moment to balance it. We can consider the aerodynamic forces as acting at the center of pressure, and thus:

$$F_e x_e + F_{cp} x_{cp} = 0 \qquad (19)$$

F_{cp} is the force which must be present to balance out the torque due to the engine thrust. The actual origin of this force is due to a perturbation from the angle of attack calculated in equation 9 due to the engine thrust. We could have used equation 8 to calculate angle of attack with engine thrusting, and then substituted into equations 2 and 3 to find force, but it is simpler to find the force directly, by using equation 19. We can now just add this force to the total force on the vehicle without engine thrusting (equation 16) to find the total force with engine thrusting:

$$F = \tfrac{1}{2}\rho v^2 \left[\frac{(\alpha_w - \alpha_t)(x_w - x_t)}{x_{cp}\left(\frac{1}{a_w A_w} + \frac{1}{a_t A_t}\right)} \right] + F_e \frac{x_e}{x_{cp}} \qquad (20)$$

R&D Report from http://nar.org National Association of Rocketry

and substitute this into equation (12) to find the loop radius as a function of engine thrust:

$$r = \frac{m}{\frac{1}{2}\rho v^2\left[\frac{(\alpha_w-\alpha_t)(x_w-x_t)}{x_{cp}\left(\frac{1}{a_w A_w}+\frac{1}{a_t A_t}\right)}\right]+\frac{1}{v^2}F_e\left(\frac{x_e}{x_{cp}}\right)} \qquad (21)$$

This is the master equation for boost glider trajectory. Using the approximation $A_w > A_t$ (equation 17), this reduces to simply

$$r = \frac{m\ X_{cp}}{\frac{1}{2}\rho\ (\alpha_w-\alpha_t)(x_w-x_t)(a_t A_t) - \frac{F_e x_e}{v^2}} \qquad (22)$$

In general, the thrust term and the coast term will be opposite. At the beginning of boost, the thrust will dominate, and the model will start looping nose down. As the velocity increases, the thrust term will become less and less important and the trajectory will straighten out, and at burn-out (or sooner if the velocity becomes high enough) loop nose up. This is the characteristic "S" curve of boost/glider flight.

R&D Report from http://nar.org National Association of Rocketry

Using this equation alone, we can see how various types of B/G's and R/G's approach the problem of vertical flight.

A pop-pod B/G functions by moving the CG forward from glide position by adding mass (the pod) ahead of the CP. This increases X_{cp}, thus increasing the loop radius, resulting in a straighter flight. Slide-pod R/G's use the same technique.

A slide-wing R/G works by a related principle. By sliding the wing back, X_{cp} is increased and X_w-X_t is simultaneously decreased. This decreases the loop tendancy during coast, but since the term involving X_w=X_t acts opposite from the thrust term, it slightly increases the "pitch down" effect of the engine during thrust.

The variable-incidence tail ("VIT") R/G works by a different principle. The $(\alpha_w$-$\alpha_t)$ term is adjusted directly to make the boost straight. As is evident, this term can be adjusted to either give a straight coast (setting it to zero), or to exactly counter the thrust force at any one point on the trajectory. In actual VIT models, therefore, the incidence selected is a compromise between thrust and coast trajectories. This is why variable incidence tail models generally require boost trimming.

"No moving parts" (NMP) R/G's work by trading off the pitch-down of the engine during thrust with the pitch up due to the wing. This can be adjusted by changing the effective X_e, by varying the engine downthrust angle and thus the distance of the thrustline from the CG. Since this can only be balanced at a single point at best, NMP R/G's typically have an "S" shaped trajectory.

R&D Report from http://nar.org National Association of Rocketry

EXAMPLE

To demonstrate trajectory analysis by this technique, consider a typical "C" B/G with the following parameters:

$A_w = 250\ cm^2\ (39\ in^2)$

$A_t = 65\ cm^2\ (10\ in^2)$

$a_w = 0.08$ (aspect ratio of 6)

$a_t = 0.06$

$x_w = 12\ cm\ (4.7\ in)$

$x_t = 40\ cm\ (16\ in)$

$x_e = 2.5\ cm\ (1\ in)$

$m = 90\ grams$

$(\alpha_w - \alpha_t) = 1^o$

Of these quantities, only a and the value of $(\alpha_w - \alpha_t)$ cannot directly be measured from the model. a can be determined from Figure 5. $(\alpha_w - \alpha_t)$ must be estimated from the airfoil used and the incidence angles built in. A quick approximation to the zero-lift line of an airfoil can be made as follows (9): the point is found which is half-way between the top and bottom surfaces of the wing, at the mid-chord (midway between leading and trailing edges). The line from this point to the trailing edge approximates the zero lift line. Note from this the interesting fact that the shape of the airfoil ahead of the mid-chord has no effect on the zero lift angle of the airfoil (at least in this approximation).

R&D Report from http://nar.org National Association of Rocketry

In order to calculate the trajectory, first we calculate the CP location:

$$x_{cp} = \frac{(.08)(250)(12)+(.06)(65)(40)}{(.08)(250)+(.06)(40)} = 18 \text{ cm}$$

Using equation 18, we now can find the coast loop radius:

$$r = \frac{(.09)(.18)}{(.55)(1)(.06)(.0065)(.28)} = 270 \text{ m}$$

This is comparable in magnitude to the expected altitude of the model: thus, the trajectory is not a prang, but not exceptionally straight either.

To calculate trajectory during thrust, let us assume an average thrust of 5 nt and an average velocity of about 40 m/s. At this thrust and velocity, we calculate the loop radius to be:

$$r = \frac{(.09)(.18)}{(.55)(1)(.06)(.0065)(.28)-(5)(.025)/(40)^2} = -896 \text{ m}$$

(The negative sign implies nose down). If the model reaches a peak velocity of 70 m/sec, we see that this changes to +470 m (nose up). Thus, the thrust phase of the trajectory is relatively straight. Immediately after leaving the rod, however, the model may only be moving at 10 m/s. In this case, the loop radius is -14 m. This shows up as a pitch down shortly after leaving the rod. Since the model accelerates very rapidly, however (about 5 G's), only a very short segment of the trajectory is affected.

R&D Report from http://nar.org National Association of Rocketry

LIMITATIONS

This model is sufficient to predict all of the important elements of the trajectory. For a more exact, albeit more complicated model, other side forces must be included. First, if the model is at an angle of attack, or if the engine pod has significant downthrust, there is a side force due to the engine:

$$F_{se} = F_e \sin(\alpha+\Theta_e) \tag{23}$$

Since this force goes as the sine of the vehicle angle of attack, it is negligible compared to other forces except in very unusual cases.

Next, if the trajectory is not precisely vertical, there is a side force due to gravity:

$$F_g = m\, g \sin(\Theta) \tag{24}$$

Since this term goes as the sine of the trajectory angle, for models with substantially straight-up boosts it is small. It can be important for models with substantial portions of near-horizontal flight. Figure 6 shows the effect of this term on a few sample trajectories (the dotted line is without this term, the solid line with). As is seen, although some details of the trajectory change, the main features are not dependent on the gravity term.

R&D Report from http://nar.org National Association of Rocketry

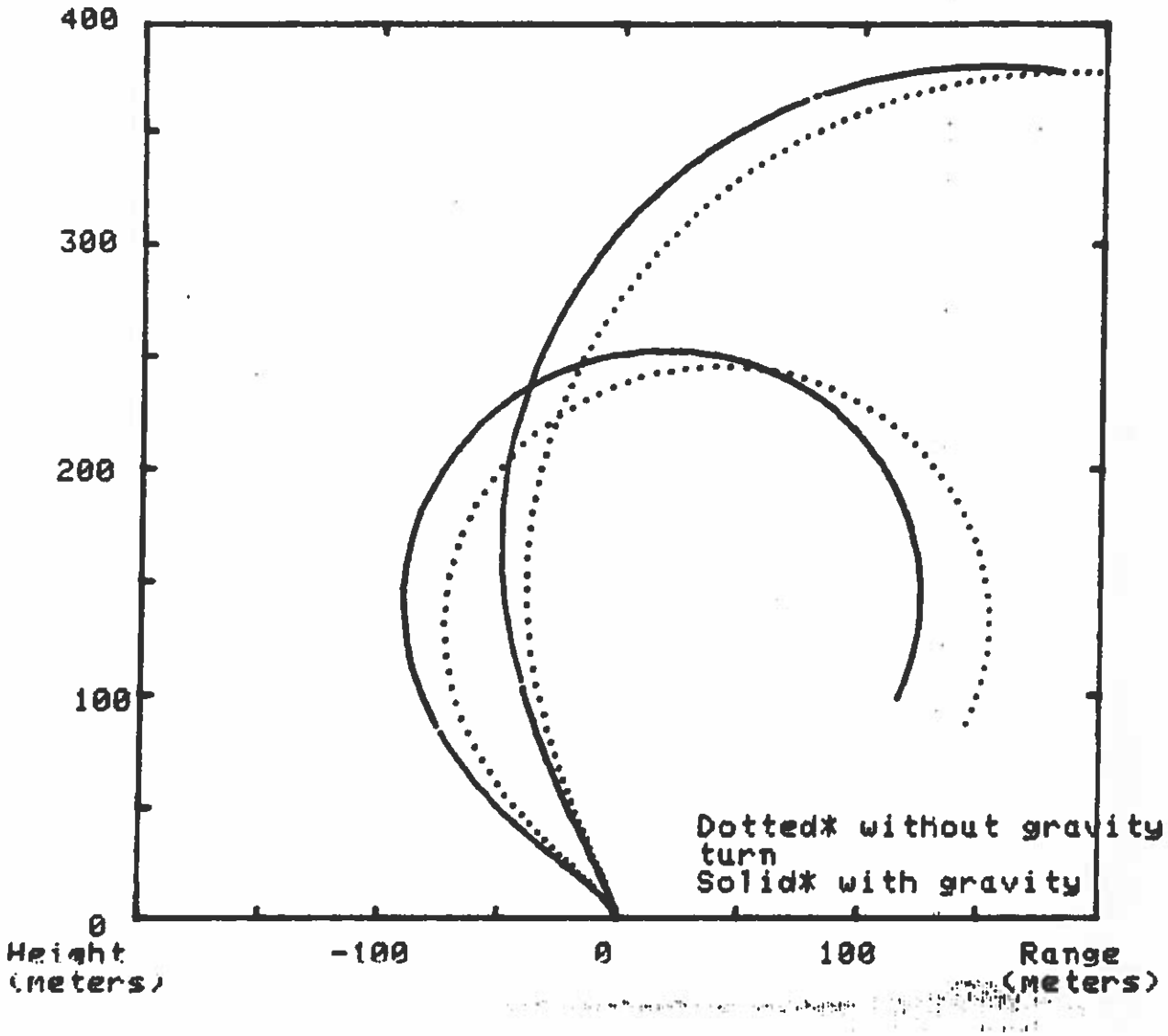

Figure 6. Boost trajectory computed with and without gravity term, for two different CG positions for a typical C6 Boost glider.

R&D Report from http://nar.org National Association of Rocketry

Third, in defining x_{cp} by equation 14, we have ignored the contributions to the CP of all of the vehicle components other than the wing and tail. Since for boost/gliders the wing and tail are in fact the major contributors to the CP, this is a reasonable approximation for this purpose. The main other contributor is the nose cone. This can be analysed with the standard Barrowman analysis[8], which assumes that a_{nose} equals 0.035 based on an area equal to the cross-sectional area.

If the drag center is not on the center of gravity, drag will also contribute a rotational moment to the vehicle. We assume that this moment is negligible.

We have also ignored the cases where the airfoil has an aerodynamic center not at the quarter chord, as, for example, a highly reflexed airfoil. This means that the current analysis cannot be directly used for flying wing designs. Extension of the method to such airfoils, however, is straight forward.

Finally, we must note that there are some cases which are not covered by the analysis at all. The linearity assumption breaks down at high angles of attack (above about 10°). Since few gliders boost at such high angles, this is not critical. The assumptions used also break down for some variable geometry cases such as swing-wings and pivot wings, where the wing boosts substantially edgewise to the airstream, and thus has a considerably different airflow over it than a standard wing.

Dynamic effects—response lag, oscillations, etc—have been ignored or assumed negligible. An exact model of these effects would have to be done by a stepwise simulation rather than the analytic model developed here.

Last, the quantitative predictive value of the theory must be considered suspect until verified by experiment. While the qualitative features of the theory (pitch down on engine burn, progressive development of pitch-up during flight, etc.) can be easily verified by simple observations of B/G boosts, it remains to be seen if the exact predictions of the theory can be shown to be valid.

R&D Report from http://nar.org National Association of Rocketry

CONCLUSIONS

A simple analysis of B/G trajectories has been derived, comparable in scope and complexity to the theories of Barrowman, Mandell, Malewicki, and co-workers for the trajectories of conventional rockets. For the simple "engine-off" case, the trajectory can be directly solved as a single equation. This equation for coast-phase trajectory, equation 13, to my knowledge has never been previously derived, yet presents a comprehensive yet elegant solution to the motion of a B/G during coast. During the engine-on phase, the trajectory is a function of velocity and thrust. Using one simple equation, equation 21, the loop radius of the trajectory can be found at any instant in time. This radius can be used in a computed iteration for the complete trajectory. This, however, is beyond the stated scope of the project.

R&D Report from http://nar.org National Association of Rocketry

REFERENCES

1. Douglas J. Malewicki, "Boost/Glider Analysis", Model Rocketry Magazine December 1969, p. 35; January 1970, p. 42.

2. Gerald Gregorek, "A Free-Flight Technique of Boost/Glider Analysis", Model Rocketry Magazine November 1971 p. 30.

3. Robert W. Parks, "Stability of Boost/Gliders", Model Rocketry Magazine January 1971 p. 26 (also available from the NAR Technical Service)

4. Geoffrey A. Landis, "Boost/Glider Trajectories", Model Rocketeer April 1980

5. Geoffrey A. Landis, "Boost/Glider Stability", Model Rocketeer November 1980

6. Geoffrey A. Landis, "Boost/Glider Stability, part II", Model Rocketeer January 1981

7. Sigurd F. Hoerner and H.V. Burst, Fluid Dynamic Lift, Hoerner Fluid Dynamics, Brick town, NJ (1975)

8. James P. Barrowman, Calculating the Center of Pressure of a Model Rocket, Centuri Technical Report, 1964.

9. Robert W. Parks, private communication.

R&D Report from http://nar.org National Association of Rocketry

APPENDIX I

LIST OF SYMBOLS

α	- vehicle angle of attack
α_t	- zero lift angle of tail ("tail incidence")
α_w	- zero lift angle of wing ("wing incidence")
ρ	- density of air (about 1.1 kg/m^3 at sea level)
Θ	- direction of trajectory from vertical
Θ_e	- engine downthrust angle
a_t	- $dC_L/d\alpha$ for tail
a_w	- $dC_L/d\alpha$ for wing
A_t	- tail area
A_w	- wing area
AR	- aspect ratio (span/average chord)
C_L	- lift coefficient
F_{cp}	- force on CP to counter engine torque
F_e	- engine thrust
F_t	- force on tail
F_w	- force on wing
g	- acceleration of gravity
m	- mass of vehicle
M_t	- rotational moment of tail
M_w	- rotational moment of wing
r	- loop radius

R&D Report from http://nar.org National Association of Rocketry

v - velocity

x_{cp} - distance to center of pressure from CG

x_e - vertical distance of engine from CG

x_t - distance of tail quarter chord from CG

x_w - distance of wing quarter chord from CG

R&D Report from http://nar.org National Association of Rocketry

APPENDIX II

BASIC PROGRAM FOR TRAJECTORY ANALYSIS

The program presented in this appendix is not intended to be a comprehensive computer program for analysis of B/G trajectories. It was only intended to demonstrate qualitatively the major features of B/G boost, and is included primarily for completeness. This program was used to calculate figure 6 of the report.

The program is written in BASIC and was run on a 4051 Tektronix microcomputer.

```
1 REM boost/glider trajectory program
2 REM Program By Geoffrey A. Landis
3 REM copyright 1982
4 REM all rights reserved
5 REM stored in tape 2 file 6
100 PAGE
110 VIEWPORT 20,105,10,95
120 Y9=100
130 WINDOW -Y9/2,Y9/2,0,Y9
140 AXIS 50,100,Y9/2,0
150 AXIS 100,50,-Y9/2,Y9
160 ON SIZE THEN 1000
170 SET RADIANS
180 D2=0.55
190 M=0.057
200 G=9.8
210 A=0.064*77/100↑2
220 C=0.1*235/100↑2
221 REM 100↑2 converts to m↑2 from cm↑2
230 A1=4
240 X0=0.107
250 X=0.194
260 X1=0.0141
270 T1=0.05
280 READ X0
300 IF X0=999 THEN 570
310 PRINT "G"
320 MOVE 0,0
```


R&D Report from http://nar.org National Association of Rocketry

```
330 F=4
340 E=1
350 T=0
360 V=0
370 Y=0
380 Q=0
390 V=V+F/M*T1-G*COS(Q)*T1-D2*V*V*C*T1/M
400 Y=Y+V*T1
410 T=T+T1
420 IF Y<1 THEN 390
430 IF T<1 THEN 500
440 IF T>6 THEN 560
450 IF E=0 THEN 500
460 PRINT "GG";
470 RMOVE V*T1*SIN(Q),V*T1*COS(Q)
480 E=0
490 F=0
500 F2=F*X1/X0
510 F1=D2*V*V*X*A1*A/X0
520 R=M*V*V/(F1-F2+M*G*SIN(Q))
530 Q=Q+V*T1/R
540 RDRAW V*T1*SIN(Q),V*T1*COS(Q)
550 GO TO 390
560 GO TO 280
570 END

1000 R=1.0E+99
1010 RETURN
2000 REM VARIABLE NAMES
2010 REM A TAIL AREA TIMES DCL/Dalpha in sq. meters*(degrees)↑-1
2020 REM A1 DIFFERENCE BETWEEN WING AND TAIL INCIDENCE IN DEGREES
2030 REM C DRAG COEFFICIENT TIMES AREA in m↑2
2040 REM D2 AIR DENSITY DIVIDED BY TWO in kg/m3
2050 REM E IS ONE WHEN THE ENGINE IS THRUSTING, ZERO OTHERWISE
2060 REM F IS THE ENGINE THRUST in nt
2070 REM F1 IS THE SIDE FORCE DUE TO THE WING AND TAIL in nt
2080 REM F2 IS THE SIDE FORCE DUE TO THE ENGINE OFFSET in nt
2090 REM G IS GRAVITY in m/s2
2100 REM M IS THE MASS OF THE VEHICLE in kg
2110 REM Q IS THE DIRECTION OF THE TRAJECTORY FROM VERTICAL, IN RAD
2120 REM R IS THE LOOP RADIUS in m
2130 REM T TIME IN SECONDS
2140 REM T1 TIME INCREMENT
2150 REM V IS THE VELOCITY
2160 REM X IS THE DISTANCE FROM WING QC TO TAIL QC
2170 REM X0 IS DISTANCE FROM CG TO CP
2180 REM X1 IS THE ENGINE HEIGHT
2190 REM Y ALTITUDE
2200 REM Y9 IS MAXIMUM ALTITUDE ON GRAPH
3000 DATA 0.107,0.2,999
```


R&D Report from http://nar.org National Association of Rocketry

This R&D Report provided as a membership bonus for joining the National Association of Rocketry at http://nar.org

Check out the other membership bonuses at http://nar.org/members/

Thank you for joining the National Association of Rocketry!