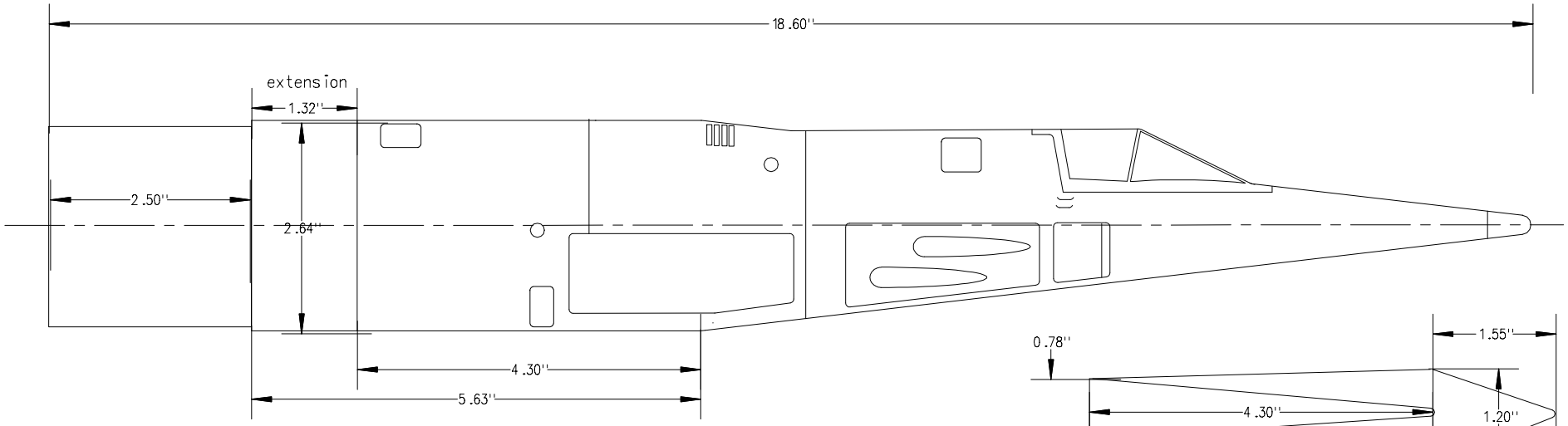

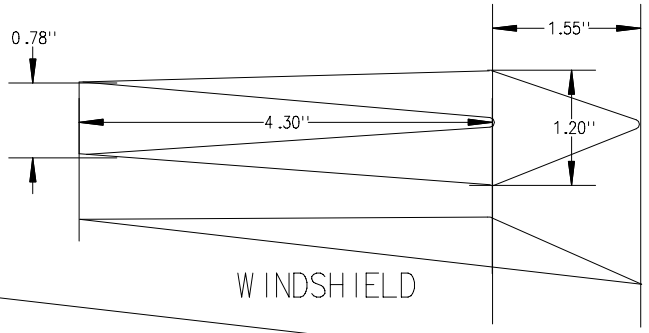

WINDSHIELD

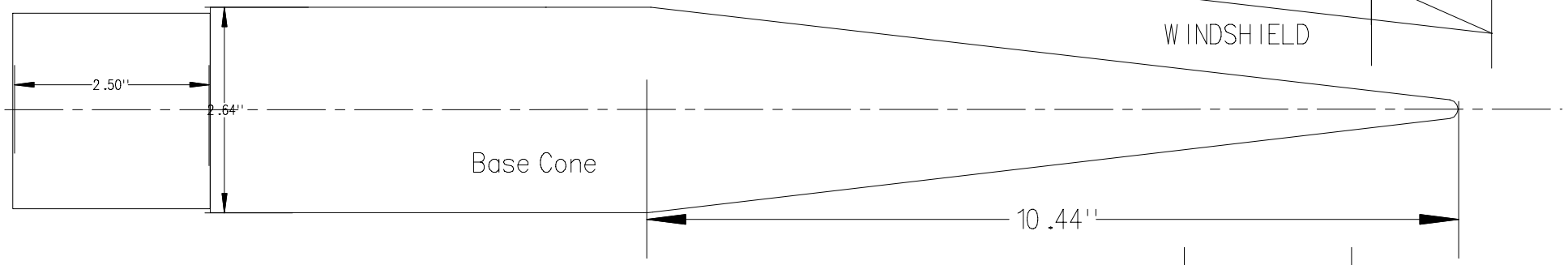

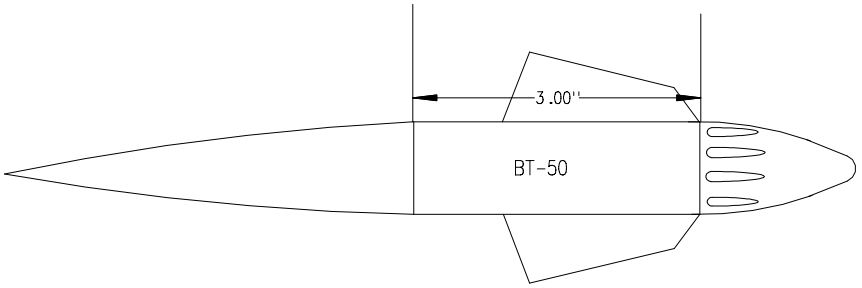

FIN PODS

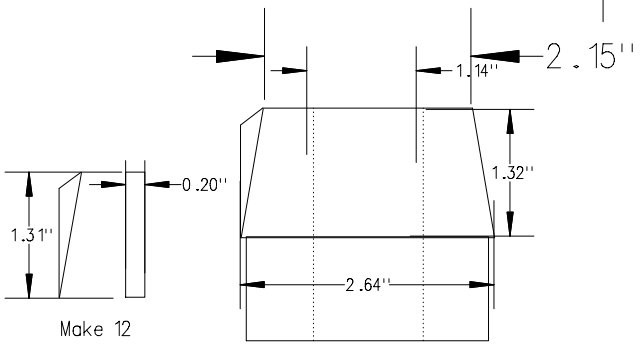

TAILCONE

k-50 PATTERNS

ASTRON INTERCEPTOR UPSCALE	
ROACHWERKS CUSTOM MACHINING	
SCALE 1:2	OCTOBER 24, 2004