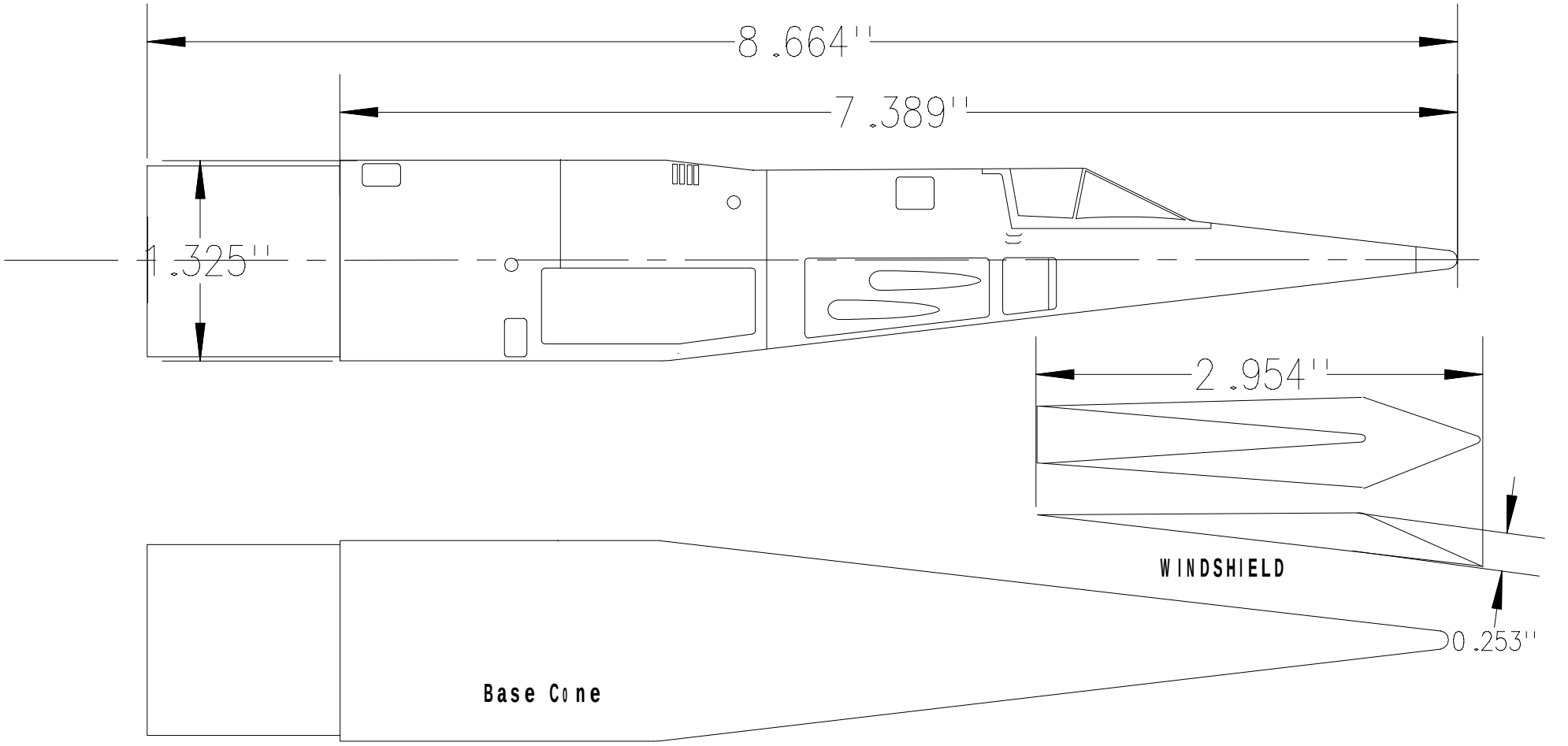

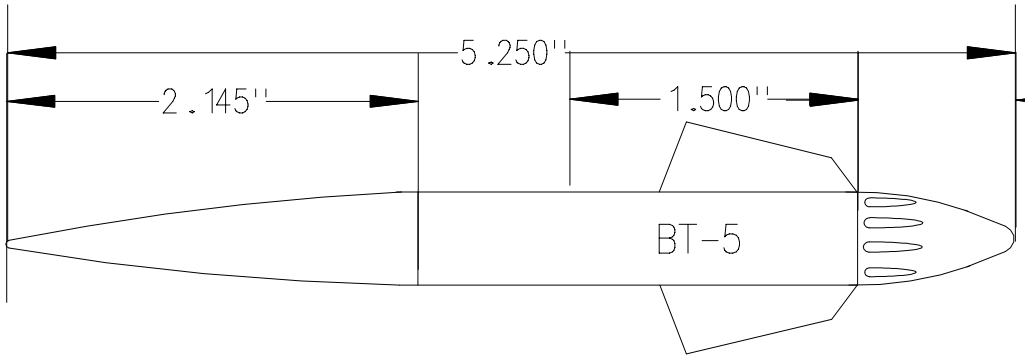

FIN PODS

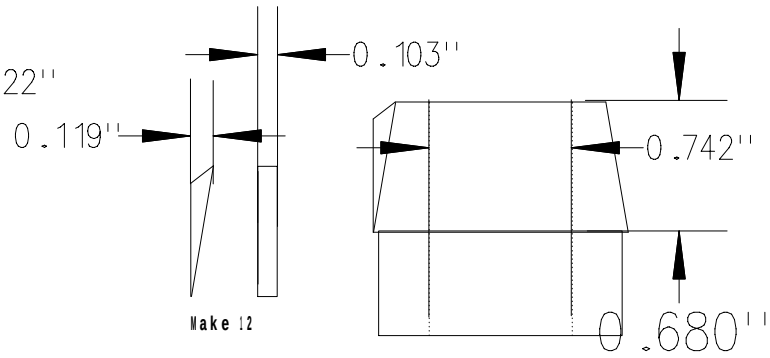

TAILCONE

K-50 PATTERNS