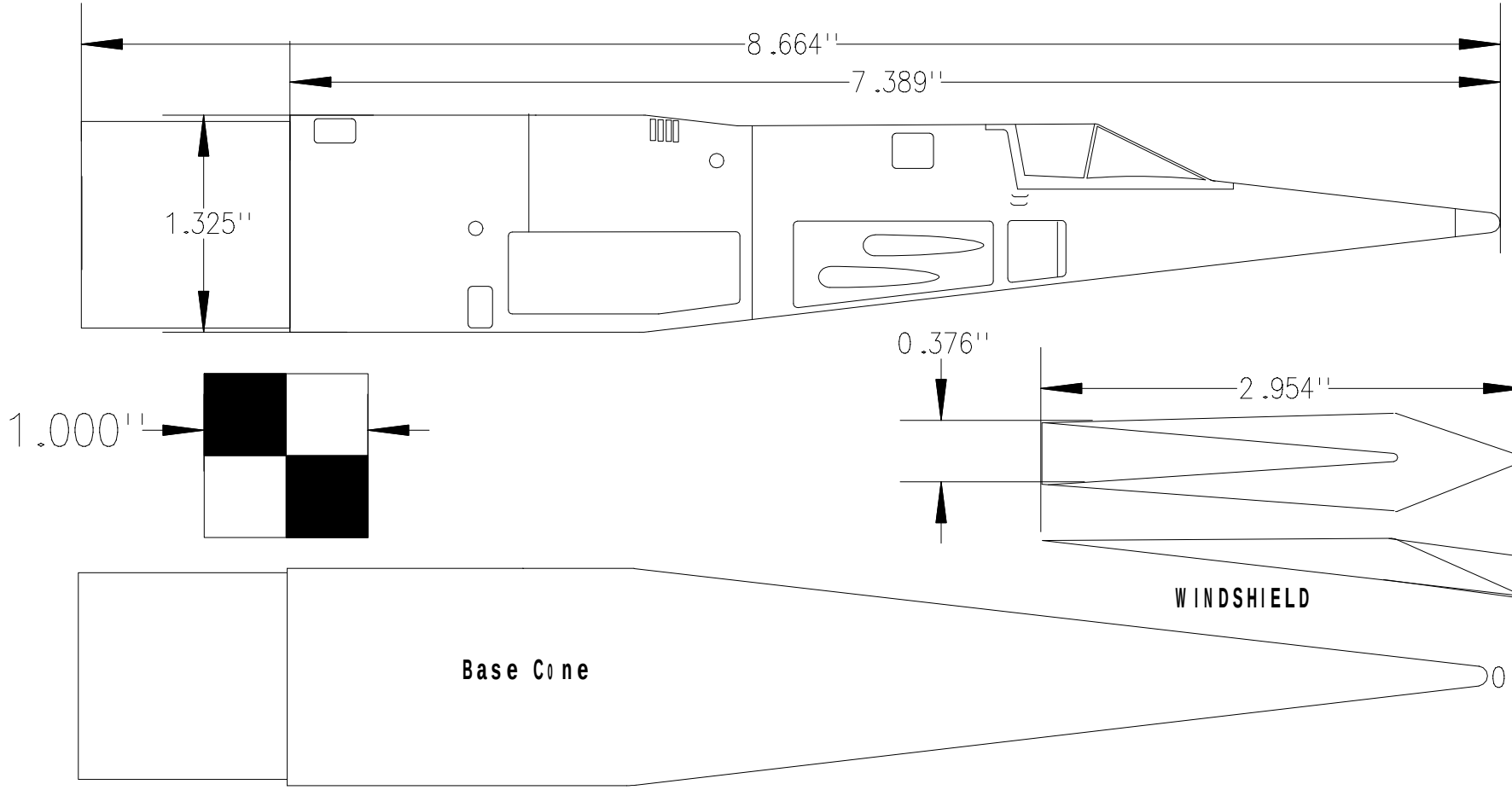


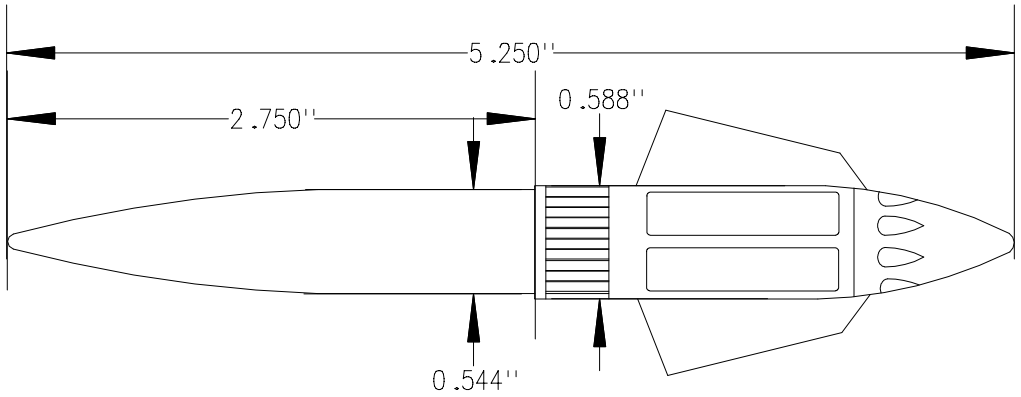


FIN PODS

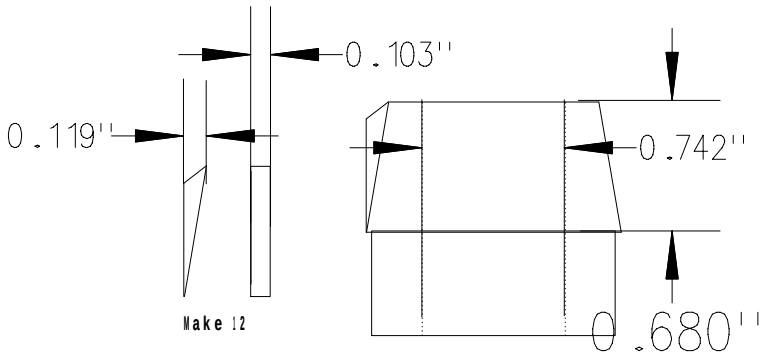


TAILCONE

# K-50 PATTERNS