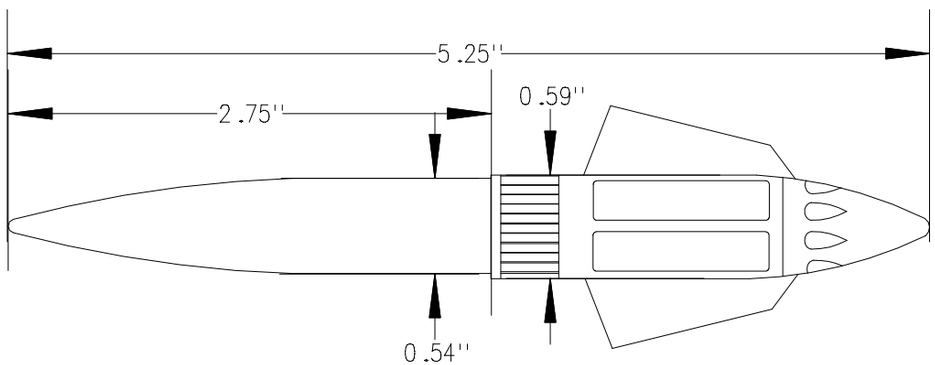

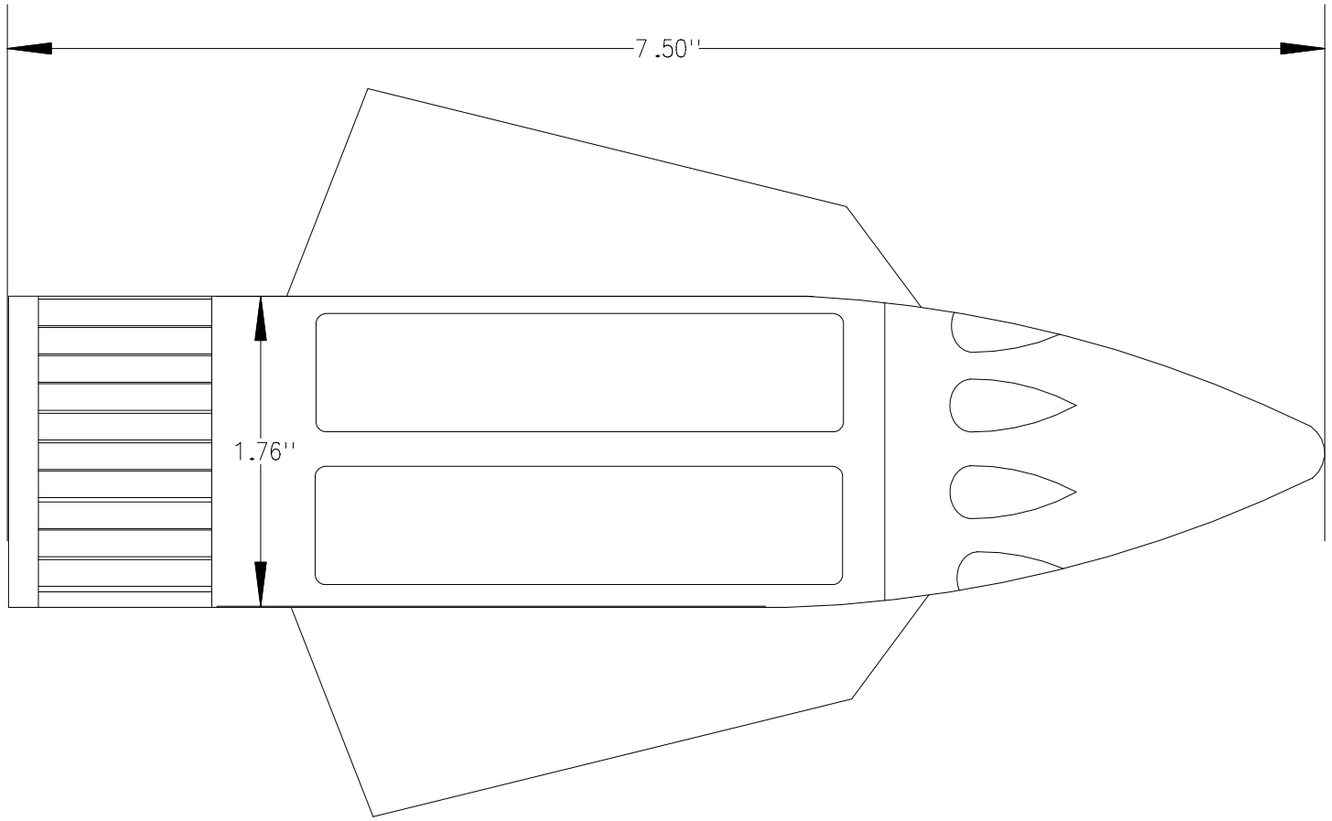

Original
Interceptor
FIN PODS

