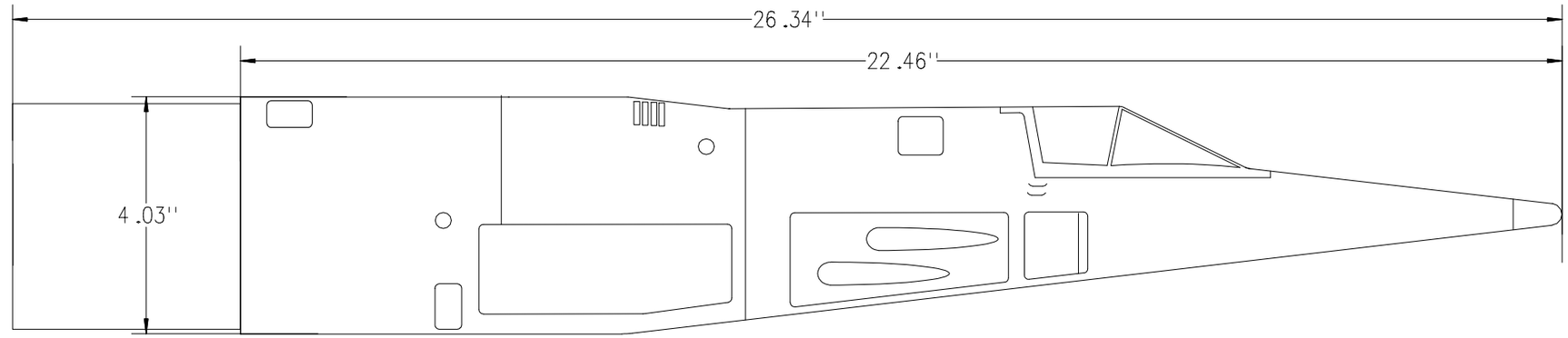

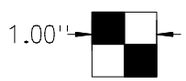

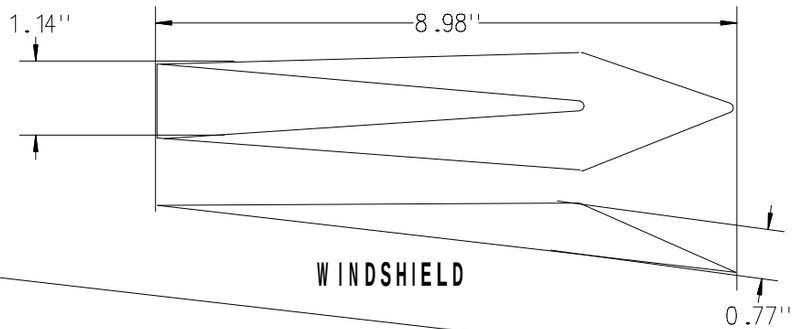

WINDSHIELD

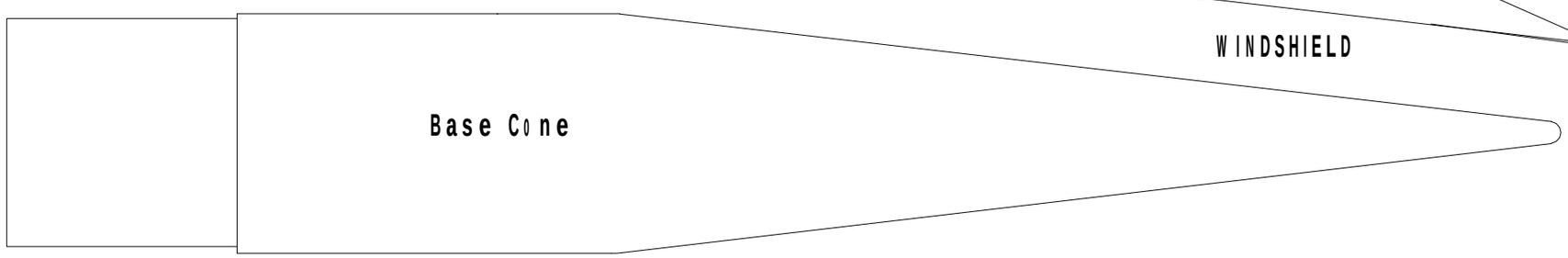

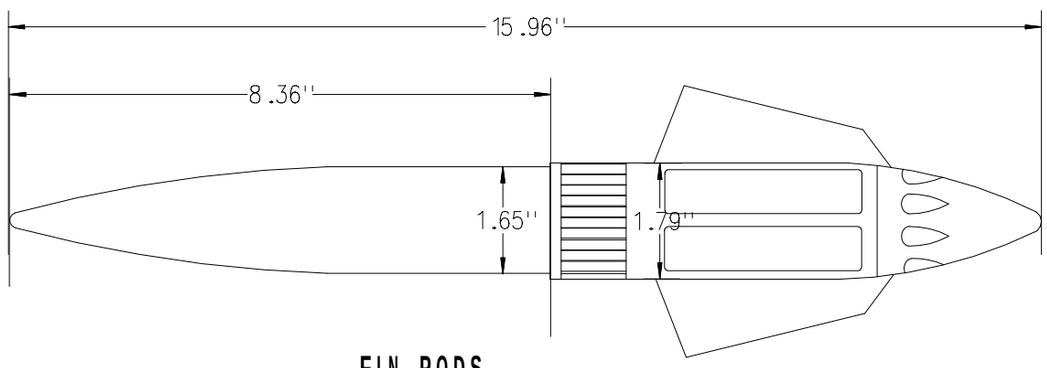

FIN PODS

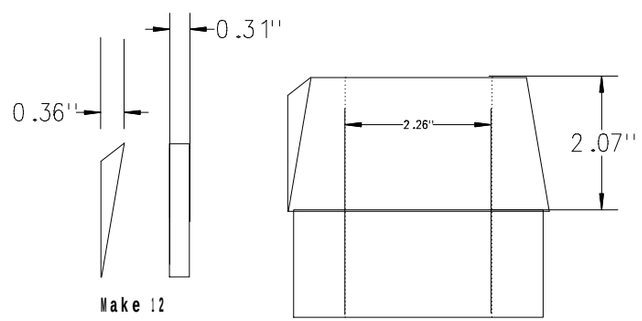

TAILCONE