

BACK VIEW

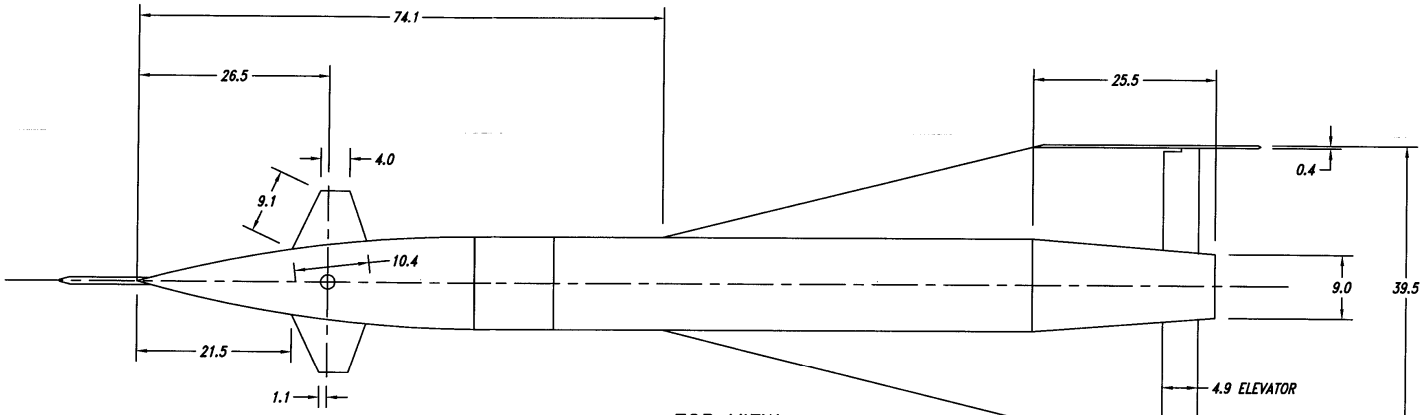

TOP VIEW

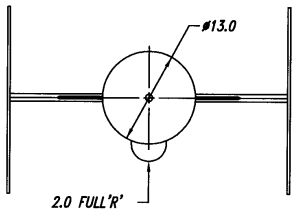

FRONT VIEW

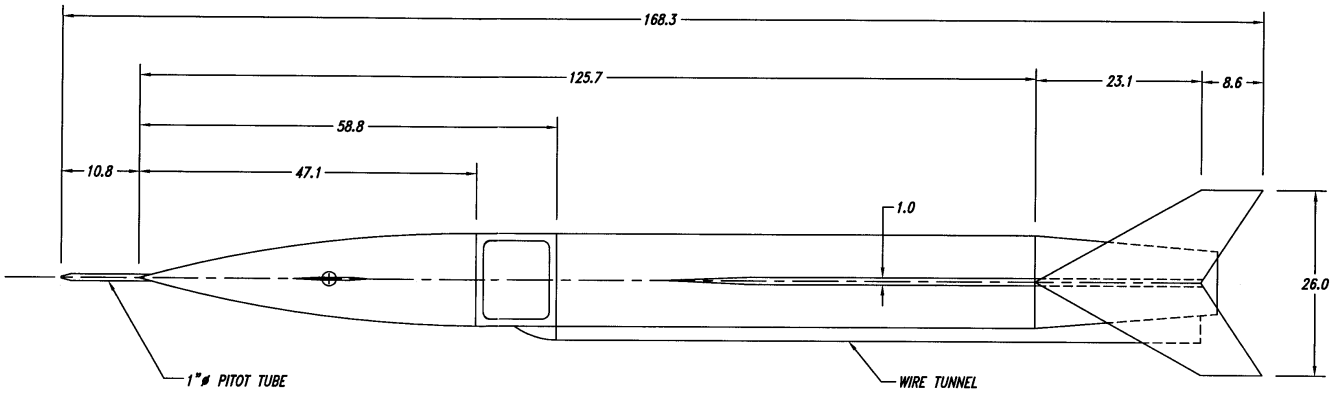

SIDE VIEW

DRAWN BY: CHARLIE THOMPSON	RAYTHEON AQM – 37C SUPERSONIC TARGET
SCALE: FULL	