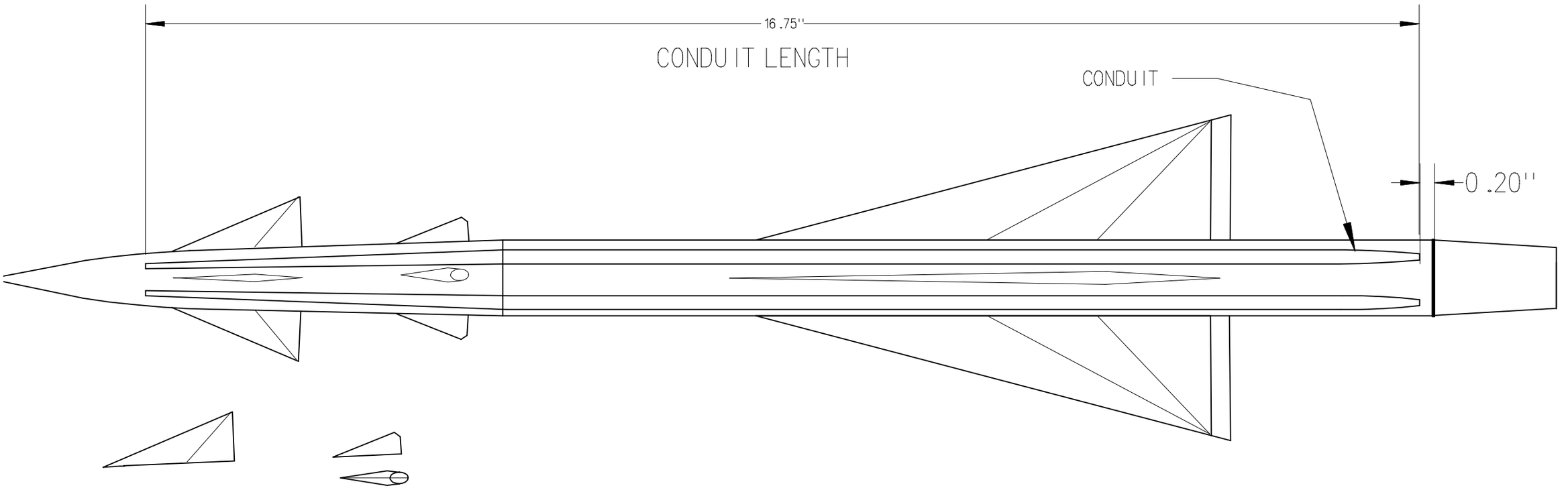

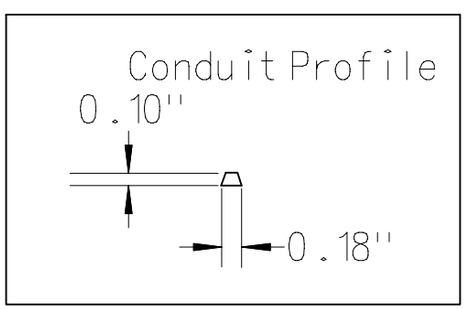

ROACHWERKS CUSTOMMACHINING		NIKE AJAX	
DRAWING TITLE: SUSTAINER			
DRAWN BY: GORDON AGNELLO			
© Copyright Roachwerks Custom Machining			
DATE: 4/21/08	SCALE: 1:1.5	UNITS: INCHES	SHEET: 1/1