Hints and Tips - Clustering

Clusters or “Clustered model rocket motors” is the process of having 2 or more motors igniting simultaneously in special configurations. Clusters serve the purpose of lofting heavy models/payloads where one motor powerful enough for the job is not available. Clusters also offer a great deal of fun and excitement as well as new and exciting techniques to learn. This sheet will provide you with a wealth of information to help make your cluster models safe, strong and successful every flight!

The figure to the right shows several of the most common types of cluster, from left to right, 2 Engine, 3 Engine Parallel, 3 Engine and 4 Engine (4 engine can be set up as a square or diamond). There is no end to the types of cluster configurations that will work, but you want to be sure that your configuration is balanced. It is also important that the motors in your cluster be as close to each other as possible.

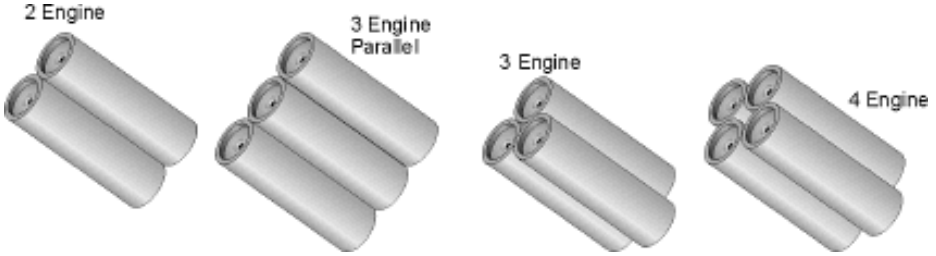

Before inserting the motors in your model, place a small wad of flameproof recovery wadding in the top end of each motor. Tape in place if needed, to keep it in place. The wadding is used to protect this end of the motor so that the ejection charge of one motor does not accidentally ignite an adjacent motor backwards, gutting your model.

To prepare your motors for hookup to the launch panel, take a small square of recovery wadding, roll it into a tight ball and, using a pencil or other pointed object, push this into the nozzle, securing the igniter in place, as shown in the figures on the right.

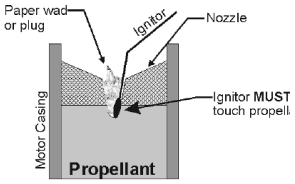

Cut-Away view showing ignitor installation

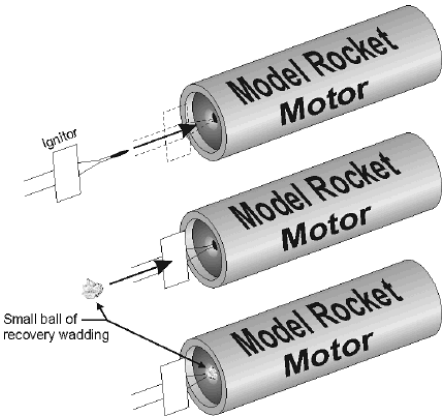

NOTE: Do **NOT** use tissue paper as this can cause fires at the launch pad. If done properly, you should be able to hold your motor by the igniter and not have the igniter come out of the motor nozzle

When configuring clusters, it is a good idea to select igniters that are Similar in size and shape, each having about the same amount of igniter pyrogen on the tip. You also want to be sure that the igniters are in good shape and not cracked or broken. A broken igniter on a single engine model results in a mis-fire. A broken igniter in a cluster can result in one or more motors not igniting, presenting possible hazards as well as damage to your model.

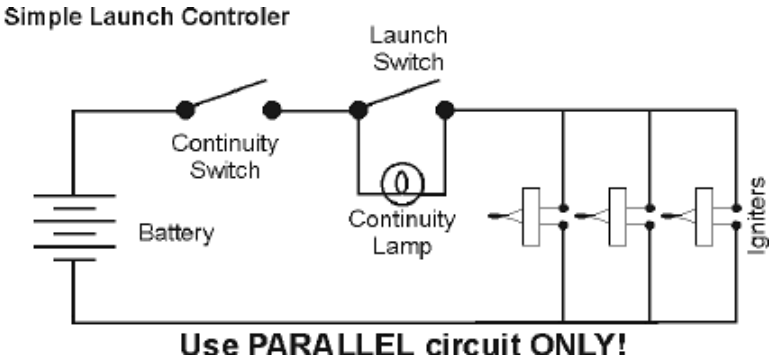

When hooking your cluster model up to the launch controller, it is important to understand that you **MUST** hook up the igniter leads in **PARALLEL** and **NOT** in series. The figure at left shows a schematic view of a PARALLEL circuit where each igniter lead is connected to the main power line. *Hooking igniters up in series (where one igniter is wired to another in a “daisy-chain” with only the first and last igniter hooked up to the launch controller) will result in mis-fires.*

The figure below shows igniter hookup on the most common cluster configurations. Note the Positive (+) and Negative (-) contacts. Most clusters will have more than one of each and the use of a “Clip Whip” (several wires connected together with alligator clips on the ends) is recommended. **NOTE: For reliable cluster ignition, it is strongly recommended that you provide a good 12VDC power source, such as a car or truck battery.**

Once you have your motors installed and your igniters installed and properly wired up, complete the preparation of your model by putting several squares of flameproof recovery wadding into the main body tube. You should use enough, loosely crumpled wadding, to fill the body tube 2 calipers (2 times the diameter of the body tube).

Carefully fold up your parachute(s) and pack into the body tube, followed by the shroud lines and shock cord(s) then replace the nose cone.

Your model is now ready for flight! Place your model on the launch pad (be sure that you have the proper launch rod for your model!)

Clear the launch area and alert your recovery crew

Check for low flying aircraft and any unauthorized persons in the launch and recovery areas

Arm the launch panel and verify continuity, then **BEGIN YOUR COUNTDOWN!**
5 4 3 2 1 LIFTOFF!

Typical igniter hookup in clusters.

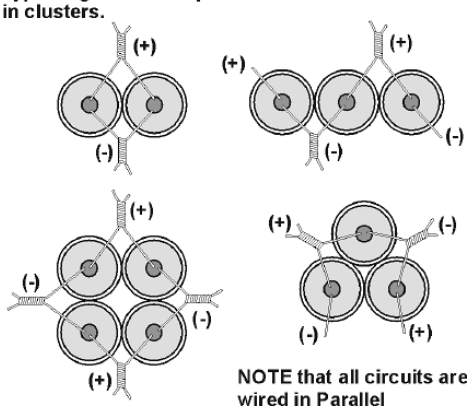

© 2002, FlisKits, Inc., All rights reserved