14 DECAL PLACEMENT

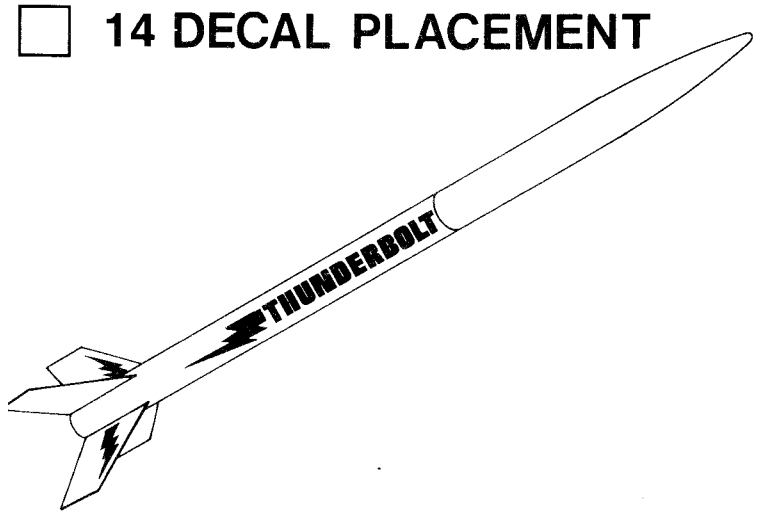

If you elect to apply decals to your model, be sure that paint is dry (allow at least overnight for drying.) Cut out a section of decal, dip in lukewarm water for approximately 30 seconds, and then slide off the backing sheet and onto model. Blot away excess water. For best results, let the model dry overnight and apply a coat of clear spray to protect the decals.

LAUNCHING COMPONENTS

Be sure to follow the HIA-NAR* Model Rocket Safety Code when carrying out your model rocket activities.
*HIA -- Hobby Industry of America
NAR -- National Association of Rocketry

To launch your model you will need the following items:
An Estes model rocket launch system
Parachute recovery wadding (Estes Cat. No. 2274)
Recommended Engines: A8-3, B4-4, B6-4, B8-5, C6-5, C6-7. Use an A8-3 engine for your first flight.

COUNTDOWN CHECKLIST

T-14 Pack 4 or 5 squares of loosely crumpled recovery wadding into the body tube.

T-13

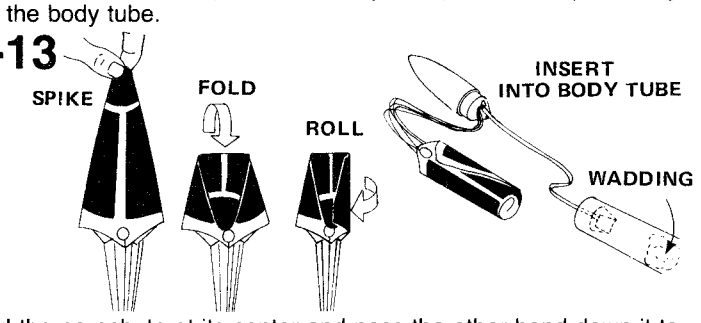

Hold the parachute at its center and pass the other hand down it to form a "spike" shape. Fold this spike in half. Roll parachute into tube shape to fit easily into body. Pack 'chute into the tube on top of the wadding. Pack the shroud lines and shock cord in on top of the parachute and slip the nose cone into place.

NOTE: DO NOT pack parachute until you are actually ready to launch. For maximum parachute reliability, lightly dust the 'chute with ordinary talcum powder before each flight, especially in cold weather.

T-12 Pack parachute, shroud lines, and shock cord neatly into rocket body.

NOTE: Nose cone should separate easily from rocket body tube, but should not be extremely loose. If fit is too tight, sand inside of body tube and shoulder of nose cone with fine sandpaper. If fit is too loose, add a wrapping of transparent tape or masking tape to the shoulder of the nose cone.

T-11

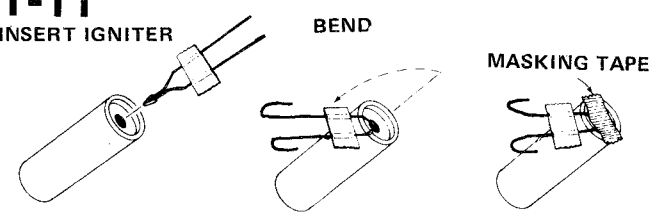

Select an engine and install an igniter as directed in the engine instructions. Use A8-3 engine for your first flight.

T-10

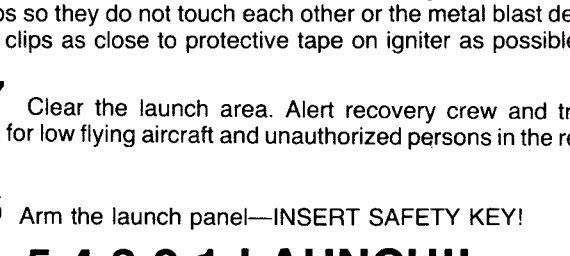

Insert engine into rocket engine mount. Engine hook must latch securely over end of the engine.

T-9 Disarm the launch panel—REMOVE SAFETY KEY!

T-8

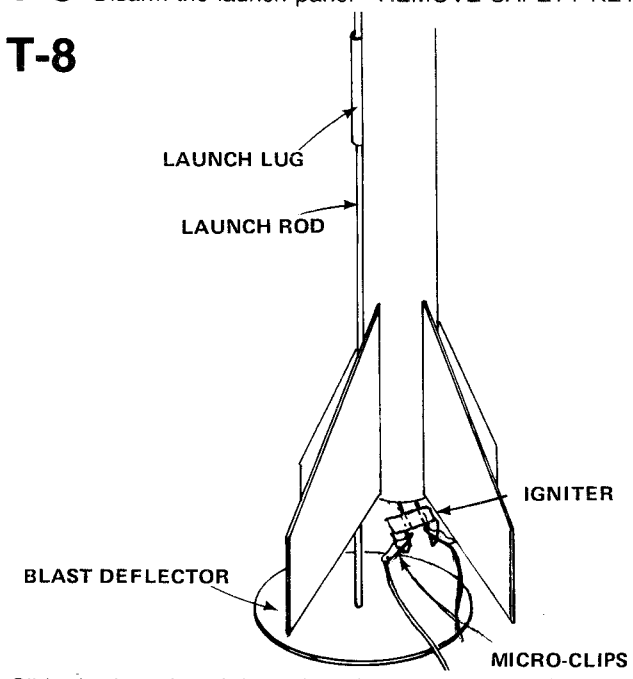

Slide the launch rod through rocket launch lug and place rocket on launch pad. Make sure the rocket slides freely on the launch rod. Clean the micro-clips and attach them to the igniter wires. Arrange the clips so they do not touch each other or the metal blast deflector. Attach clips as close to protective tape on igniter as possible.

T-7 Clear the launch area. Alert recovery crew and trackers. Check for low flying aircraft and unauthorized persons in the recovery area.

T-6 Arm the launch panel—INSERT SAFETY KEY!

5-4-3-2-1-LAUNCH!!

Repeat Countdown Checklist for each flight.

MISFIRE PROCEDURE

Occasionally the igniter will heat and burn into two pieces without igniting the engine. This is almost always caused by a failure to install it correctly. REMOVE SAFETY KEY from launch panel, remove the model, clean the igniter residue from the engine nozzle, and install a new igniter. Repeat the Countdown Checklist.

82175

THUNDERBOLT

SKILL LEVEL 1 - Recommended for Beginner Rocketeers.

ESTES
A DAMON COMPANY
ESTES INDUSTRIES
1295 H STREET
PENROSE, CO 81240 USA

BEFORE YOU START

Read all instructions before beginning work on your model. Make sure you have all parts and materials. When you are thoroughly familiar with the assembly procedure, begin construction. Check off each step as you complete it. In each step, test-fit all parts together before applying any glue. If some part doesn't fit properly, sand lightly or build up as required for precision assembly.

TOOLS AND MATERIALS

In addition to the parts included in this kit you will need: Scissors, white glue (Elmer's Titebond, or similar), a sanding sealer, masking tape, paint brush, blue spray enamel, and black spray enamel.

PARTS LIST KIT NO. 1429

A	1	Engine Mount Tube (type BT-20J)	30326
B	2	Adapter Rings (type RA-2055)	30126
C	1	Engine Hook (type EH-2)	35025
D	1	Body Tube (type BT-55)	30382
E	1	Launch Lug (type LL-2B)	38178
F	1	Nose Cone (type PNC-55AC)	71070
G	1	Shock Cord (type SC-1)	85730
H	1	Shroud Line (type SLT-108)	38239
I	1	Tape Disc Set (type TD-3F)	38406
J	1	Parachute (type PK-18A)	85566
K	1	Balsa Fin Sheet (type BF-78)	32239
L	1	Decal (type KD-1429)	37091
M	1	Pattern Sheet (type SP-1429)	On This Page
N	1	Shock Cord Mount (type SCM-50)	On This Page

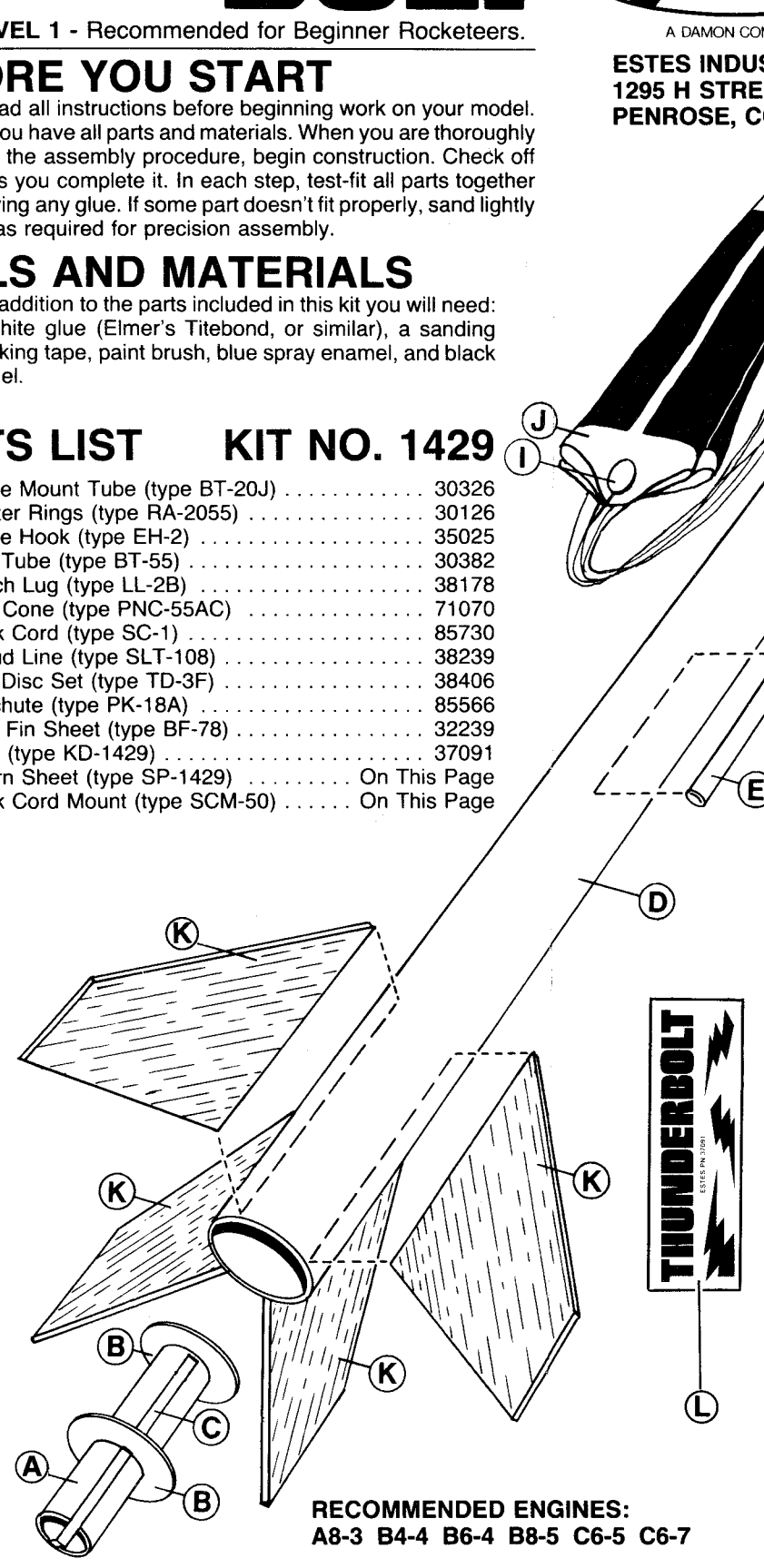

RECOMMENDED ENGINES:
A8-3 B4-4 B6-4 B8-5 C6-5 C6-7

