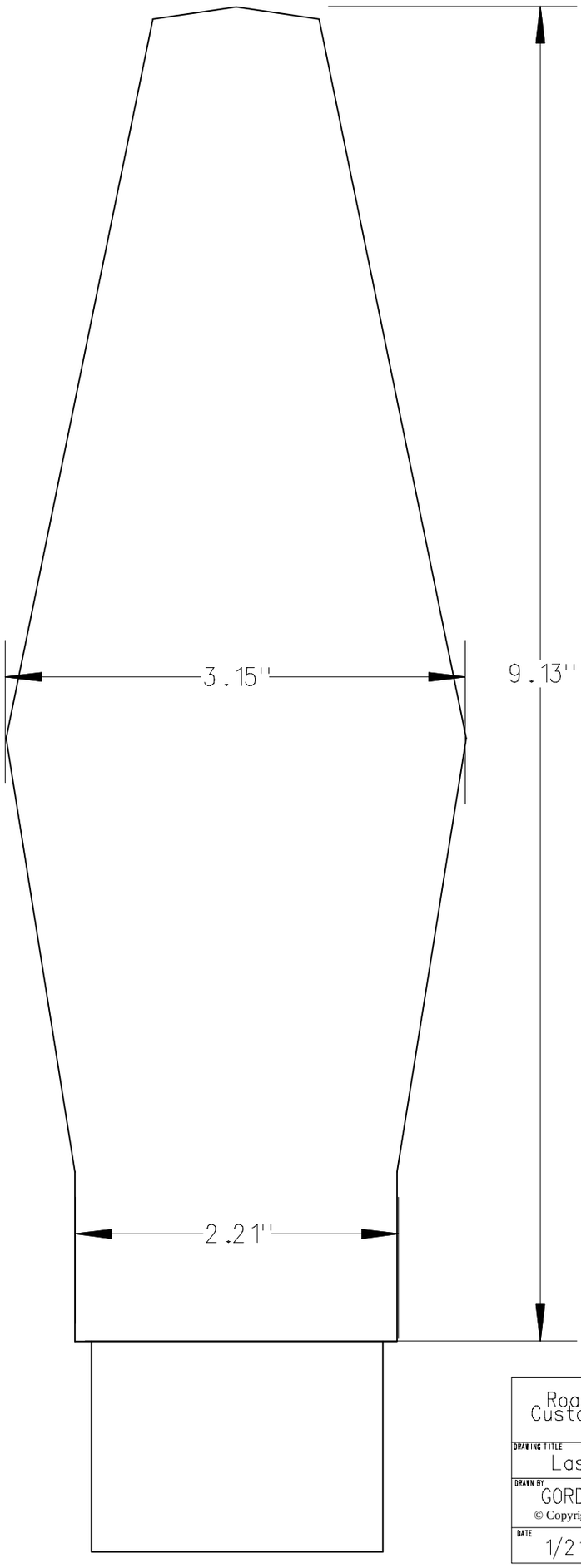

Roachwerks Custom Machining	Laser Lance		
DRAWING TITLE: Laser Lance nose cone fits BT-80			
DRAWN BY: GORDON AGNELLO			
© Copyright Roachwerks Custom Machining			
DATE: 1/21/12	SCALE: 1:1	UNITS: INCHES	SHEET: 1/1