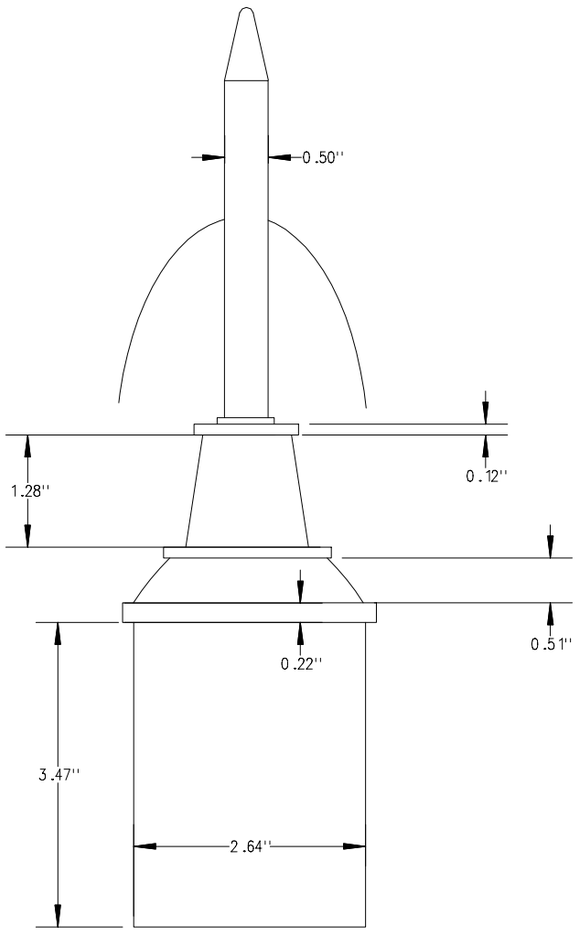

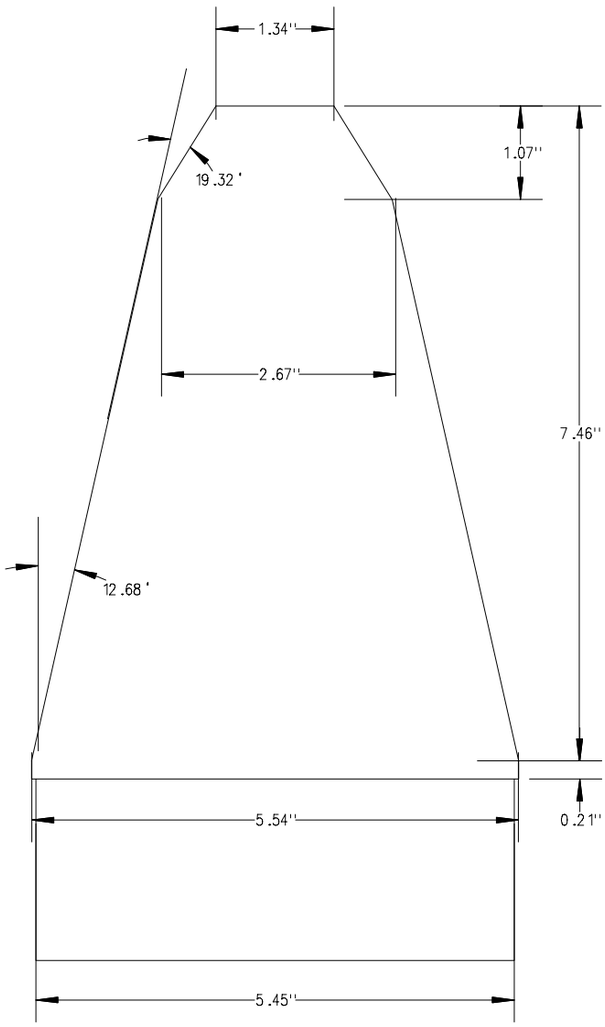

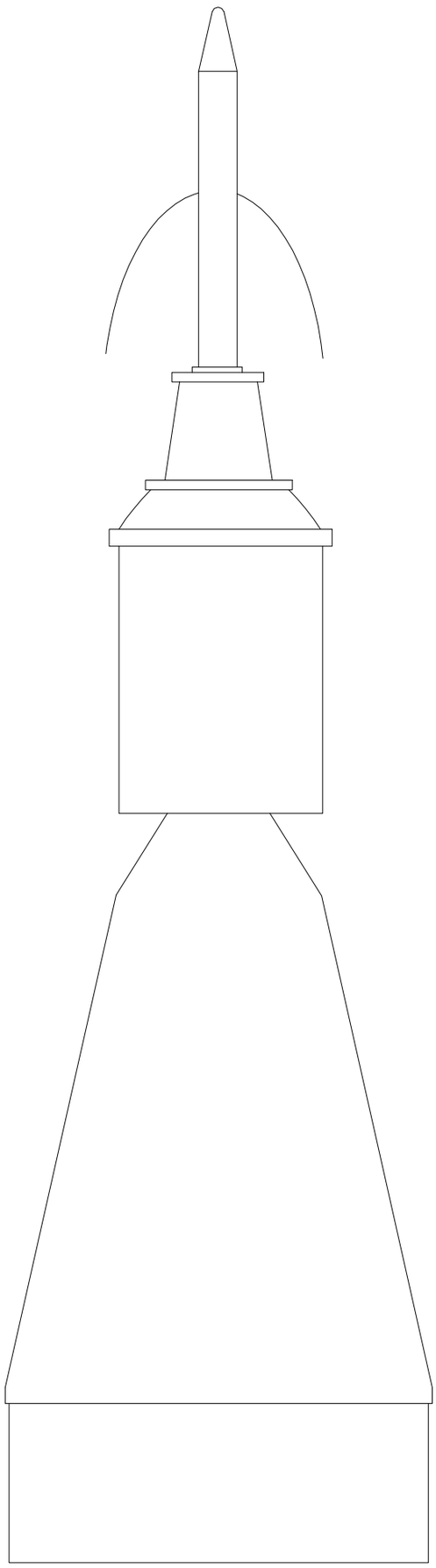

ROACHWERKS CUSTOM MACHINING	
JUPITER C	
5.54'' Main Body	16 JAN 2008