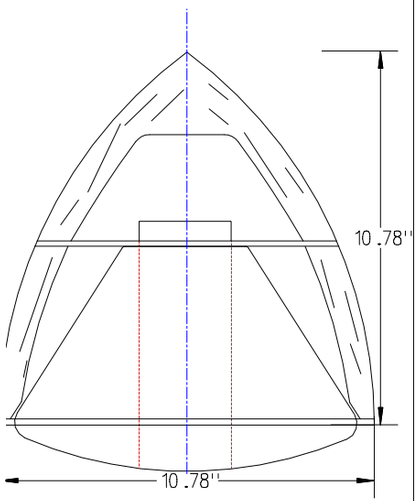

ORIGINAL DESIGN

DWG #1

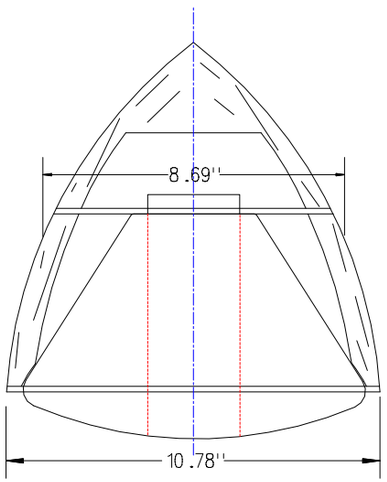

DESIGN CHANGE #1
SHORTEN AEROSHROUD BY 14'' (0 .7'')
MOVE CAPSULE AND INNER STRUCTURE UP

DWG #2

THIS IS THE ONE I'M MAKING NOW

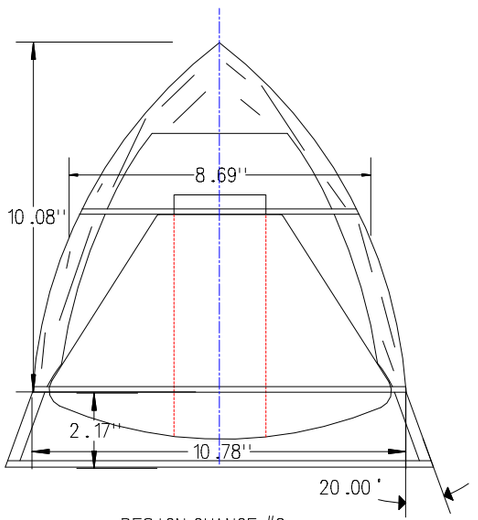

DESIGN CHANGE #2
INCORPERATE DESIGN CHANGES FROM #1
AND ADD 43 .3'' FLARE

DWG #3

THIS IS THE CHANGE YOU MENTIONED

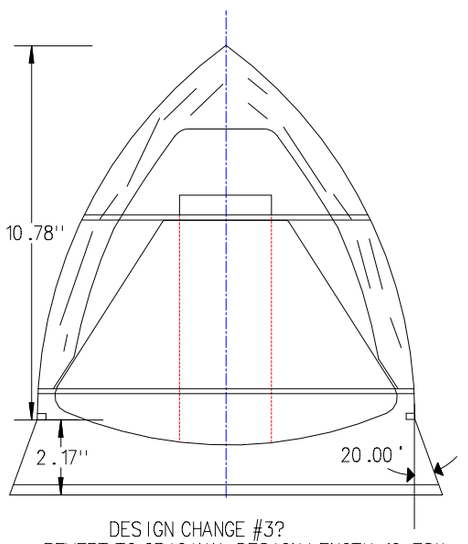

DESIGN CHANGE #3?
REVERT TO ORIGINAL DESIGN LENGTH 10 .78''
SHIFT CM 15'' FORWARD (0 .7'')
ADD 14'' (2 .17'') FLARE

DWG #4

THIS IS HOW I INTERPRETED THE LAST PDF

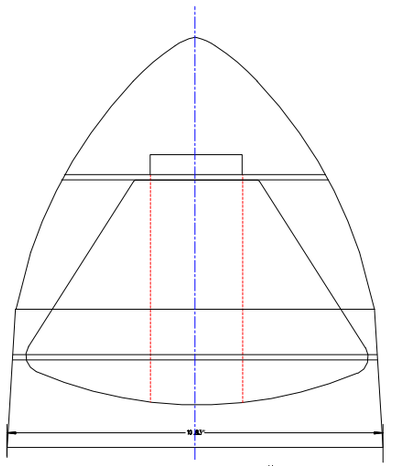

DESIGN CHANGE #4
MODIFIED SEARS-HAACK WITH
FLARE AND ROUNDED TIP .

DWG #5

THIS IS HOW I INTERPRETED THE LAST PDF

ROACHWERKS CUSTOM MACHINING	
CEV MOCK UP 1/20TH SCALE	
FOAM/FIBERGLASS	CHANGE #5 24 JAN 08