ECHO 1

7

FLIGHT SYSTEMS

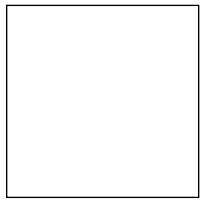

1 INCH SQ

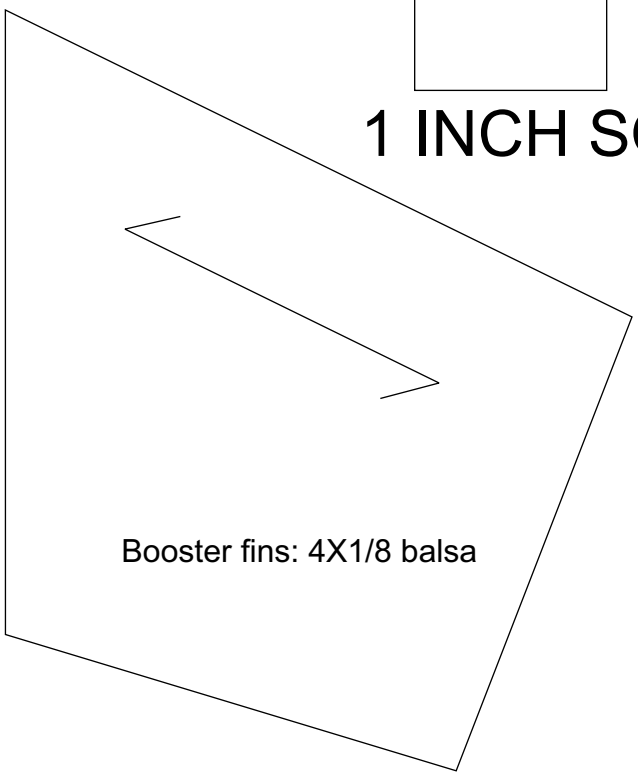

Booster fins: 4X1/8 balsa

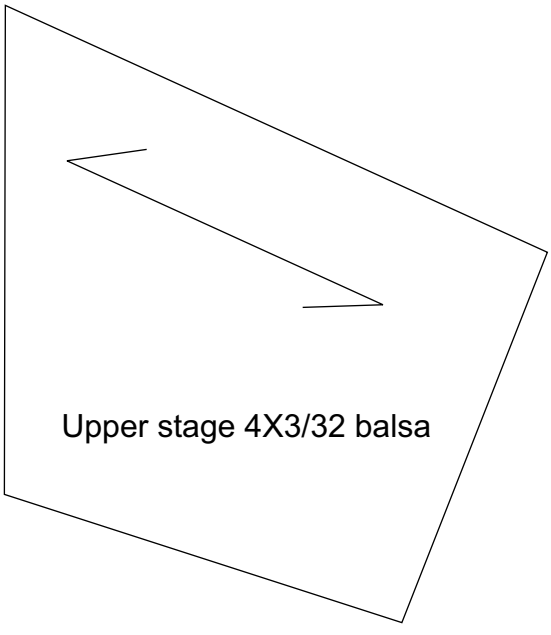

Upper stage 4X3/32 balsa