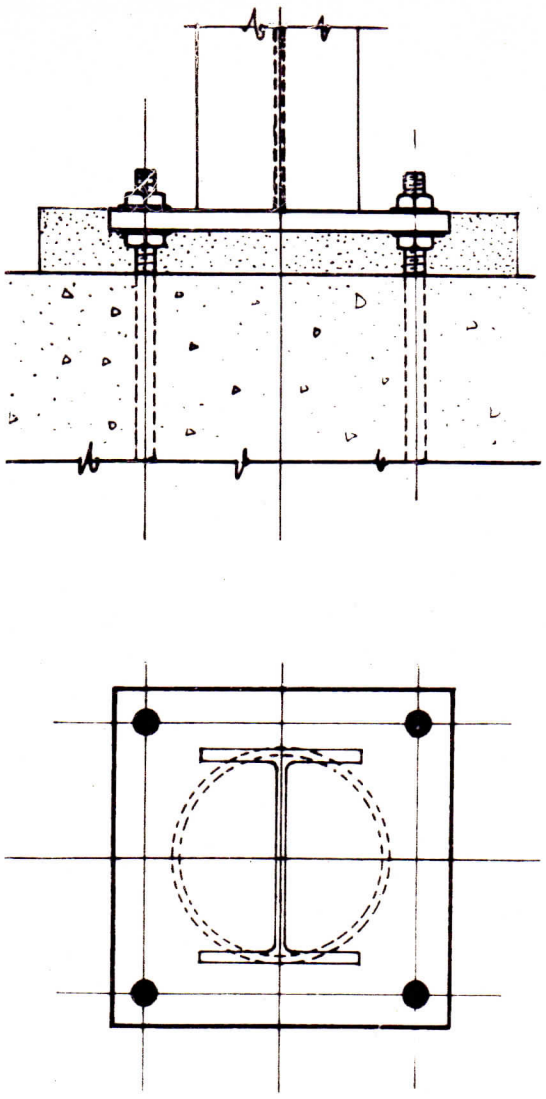

Fig. 1—Details of column base assembly

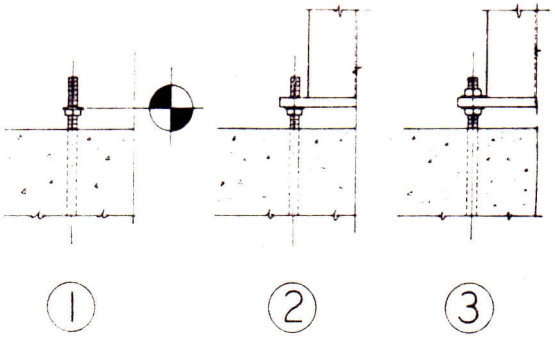

Fig. 2—Sequence of operation

washer to the theoretical elevation of the bottom of the base plate; (2) land the column and (3) tighten the upper nut.

If for any reason the top of the column needs to be drifted or the elevation changed or adjusted, the operation is relatively simple. The space between base plate and concrete should be grouted as soon as the steel has been checked for alignment and elevation.

The use of the double nut anchor jack is not new; its first large use was on some cell blocks for the State of Illinois in 1946. Nor are the use of these bolts limited to steel columns. Amirikian's "Precast Concrete Offers Protection Against Atomic Blast," in the March 1951 JOURNAL illustrated their use in precast construction (Section 1-1, Fig. 7, p. 509).

CHARLES MACKLIN, architect and structural engineer, Springfield, Ill.

Factors Influencing Concrete Strength (LR 48-2)

We have noted the differences in strength yields of the several brands of cement we work with. To aid in the design of concrete mixes we made an extensive study of Type I cement from several producers (Fig. 1). It will be noted that the cements were as divergent in strength yield as those shown in Fig. 3 of Price's paper in the February 1951 JOURNAL.*

Price says, "For approximately the same compressive strength the difference in cement content for concrete containing aggregate up to ¾ maximum, and one containing aggregate graded up to 1½ maximum, is about ⅔ sacks per cu yd of concrete."

Job test data does not always agree with this premise. Ready-mixed concrete customers who buy "sack mixes," *i.e.*, specifying only maximum size aggregate and cement content per yard, have found it easier to handle a ¾ maximum mix than a 1½ maximum mix. Better concrete results with the use of smaller material. We have found that a job foreman can handle drier concrete

*Price, Walter H., "Factors Influencing Concrete Strength," ACI JOURNAL, Feb. 1951, *Proc.* V. 47, pp. 417-432.