Updgrading the Estes Mercury-Redstone to Use 24mm Motors



If you're like me, you've always been attracted to the scale models of NASA's manned space program. Everybody wants a symbol of our triumphs in space, and kits like the Mercury-Redstone really catch our eye. With frequent sales at Hobby Lobby, I have acquired three of the EST2167 kits - one to build, one to convert to a Little Joe, and one for a spare.

Doing some research on the web to better understand the various paint and decorating schemes for the MR and Little Joe, I came across the plans at JimZ for the earlier version of the kit, EST1921. This is basically the Centuri kit with Estes branding, and very similar to the current version. But one thing that sticks out on the first page of instructions is this: "Uses C5-3 Engine only."

Well, that motor is long out of production. And I can't imaging they've done anything to the newer version to make it better for flying on lesser motors - other than changing the recommended engines to C6's. Hence, it's probably better to fly it on motors with more kick than the C6. But there are only a handful of 18mm motors more powerful such as the Aerotech reloadable D13 and D24 and the as-yet-unreleased Quest D20. The older single use D21's could work, too, but are about as scarce as C5-3's.

The Estes C11 is really the best replacement for the C5, but only comes in 24mm. If you don't want to invest in the Aerotech 18 reload hardware, converting the Mercury-Redstone to 24mm is a good alternative. Besides C11's, D12's, E9's and all sorts of Aerotech 24mm motors can be used all the way up to G55's, but that's too rich for my blood. I expect that C11's and D12's will pretty much be it for me.

The motor mount assembly for the EST2167 is quite different than most. It uses two styrene rings with four rails 90 degrees apart connecting them. An 18mm motor tube sits in the middle of the four rails.

The rails function as the anchors for the through-the-wall fins. Ordinarily, upgrading a motor mount is simple - just use rings with larger, 24mm holes and a larger motor tube. But since this kit uses these special rails, it's necessary to retain the mating, stock rings.

This makes the task harder requiring the modeler to enlarge the 18mm holes to 24mm, and to then reinforce the structure weakened by the modification. Trying to enlarge a hole and keep it round and centered can be difficult, but with a few tricks, it's very manageable.

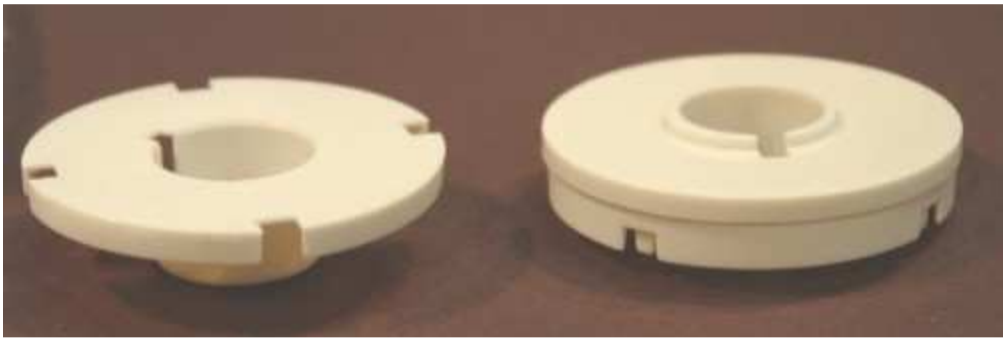

Above are the stock rings. The aft ring is stepped which provides a stop for inserting it into the airframe. Because of the step, the aft ring is slightly larger in diameter than the forward one.

The conversion begins with sanding the surfaces to rough them up so that some thick CA will stick to them. Additionally, the protrusion on the aft ring will be sanded smooth.



A sanding block with 150 grit does a great job roughing up the surfaces and removing the protrusion.

Templates were drawn in Autocad, but many drawing tools can be used. A pdf of the templates can be downloaded here:
<insert link>
Be sure to print it with no size adjustments.

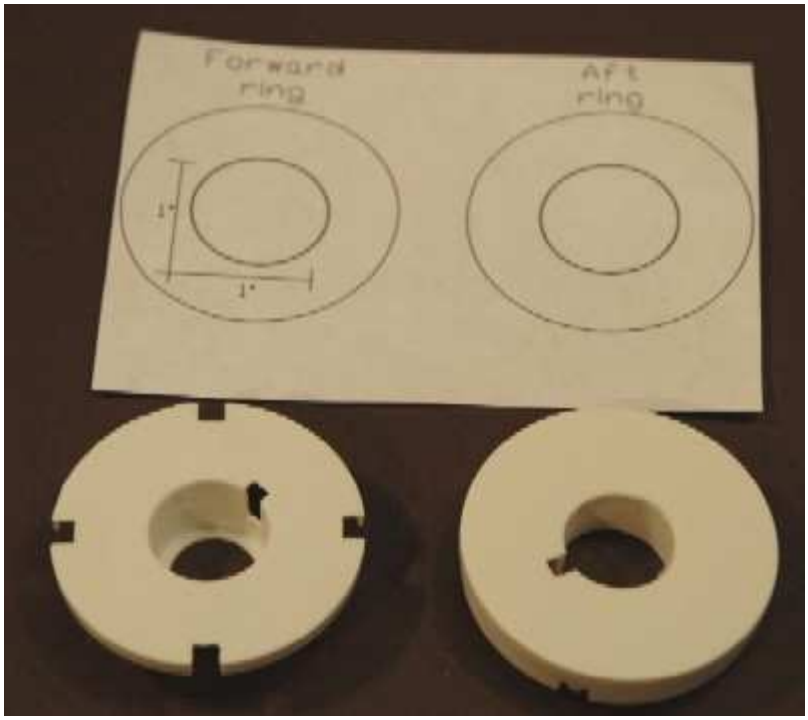

The paper rings are cut out and glued to the styene rings with thick CA. It provides a little working time to get the paper placed just right.

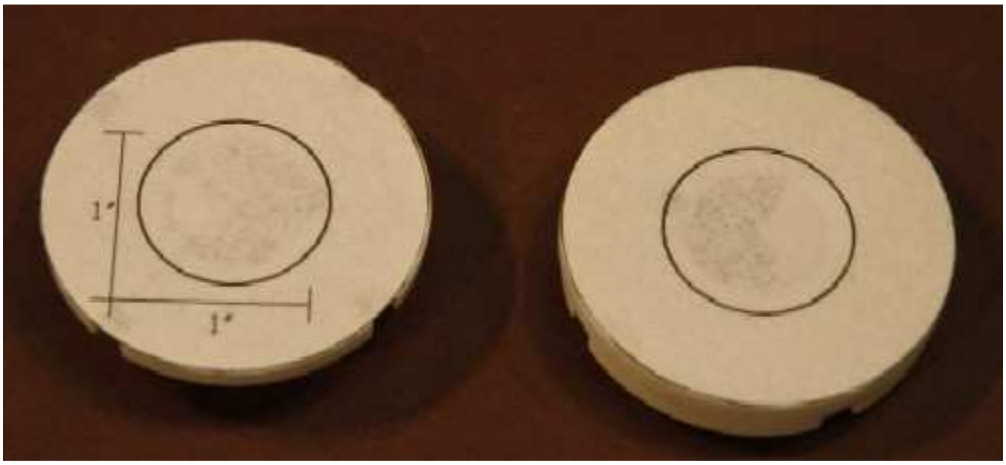

Here are the rings with the paper templates in place.

Next a series of holes is drilled just inside the inner circle of the template. The holes are spaced close so that the material between holes can be easily cut with an X-acto knife.

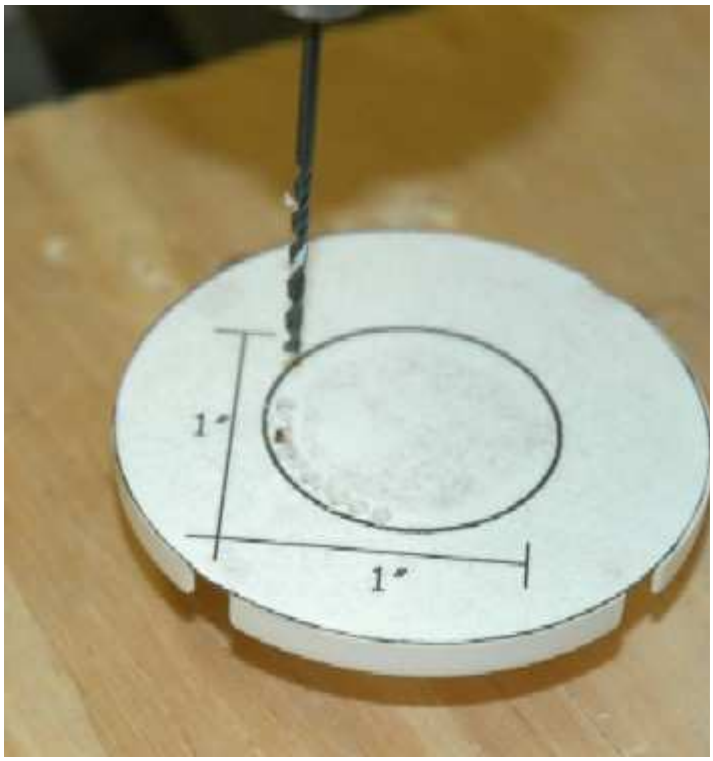





A piece of BT-20 wrapped with 150 grit makes a great sanding tool. For regular BT-50, sand up to the black line. For heavy duty 24mm tubes, sand through the black line. In either case, sand evenly and make frequent test fits with the motor tube.

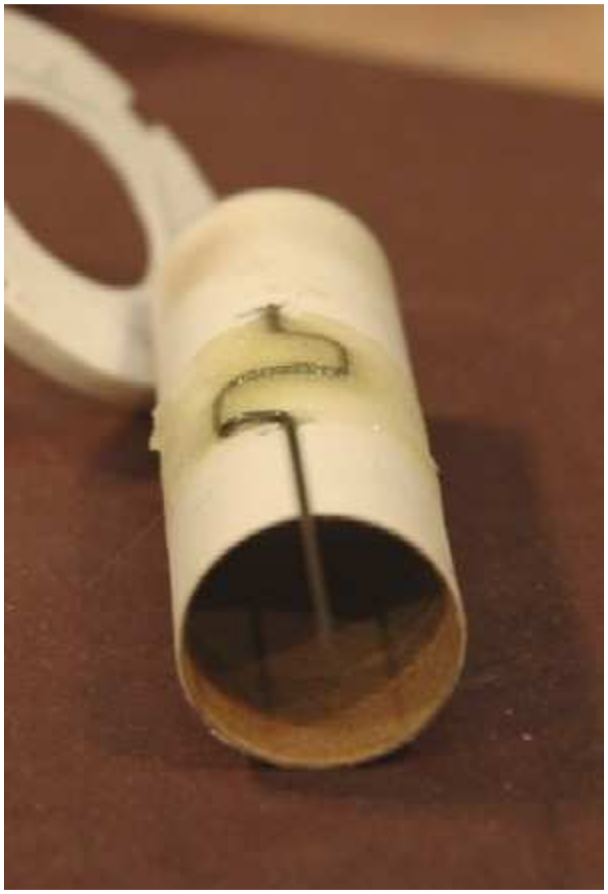

A motor hook must be attached to the motor tube before attaching the rings. Here, a length of fine piano wire (~0.020-0.025" diameter) was fashioned into a hook and attached with a piece of 6 ounce glass and some thick epoxy.

Test fit the tube in the rings with the rails attached to determine the best position for the hook. Too far aft or forward and it will interfere with the reinforcing rings (coming up).

No engine block is needed. Instead a thrust ring will be use on the motors. For Estes 24mm C's and D's, that will be three wraps of 1/4" masking tape at the very aft end. Since no engine block is employed, any length 24mm motor can be used, but the tube only needs to be long enough to span the stock distance. Mine was cut to _____.

Next, a ring is attached to the outside aft end of the motor tube using yellow (wood) glue. Here, a BT-50-55 centering ring was used, but the outside ring diameter is not critical. This ring will reinforce the stock ring.

Also, notice that the hook has been bent to shape and cut to length.






Here, the aft ring has been epoxied in place. Notice that small holes were drilled to allow epoxy rivets to form thus further strengthening the glue joint. Before attaching it, I sanded the inside of the styrene ring where it mates to the paper ring to help the adhesion of the epoxy.

Also, notice that a relief was cut for the motor hook. It was positioned between two rails.

Once the epoxy began to set, I glued the four rails to the forward ring (bottom in the right pic), then snapped them in place to the aft ring (top). The intent was to make sure everything was aligned while the model cement set. Again, the rails were not glued at the aft end (yet).

Templates were drawn in Autocad, but many drawing tools can be used. A pdf of the rings can be downloaded here: <insert link>

The paper rings are cut out and glued to the styrene rings with thick CA. It provides a little working time to get the paper placed just right.

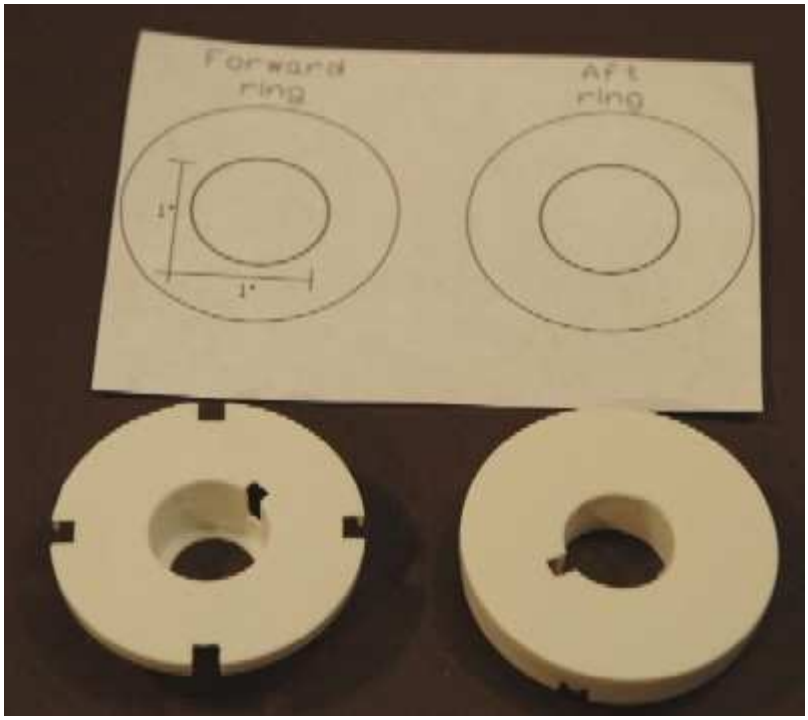

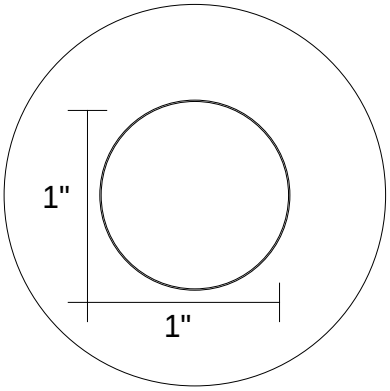

Forward Ring

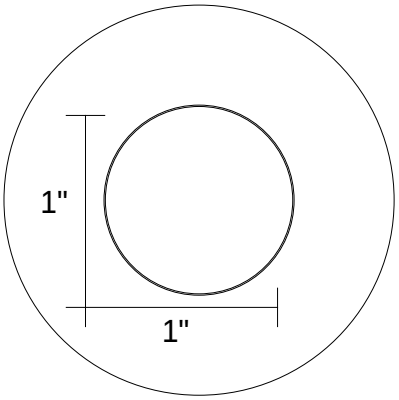

Aft Ring

