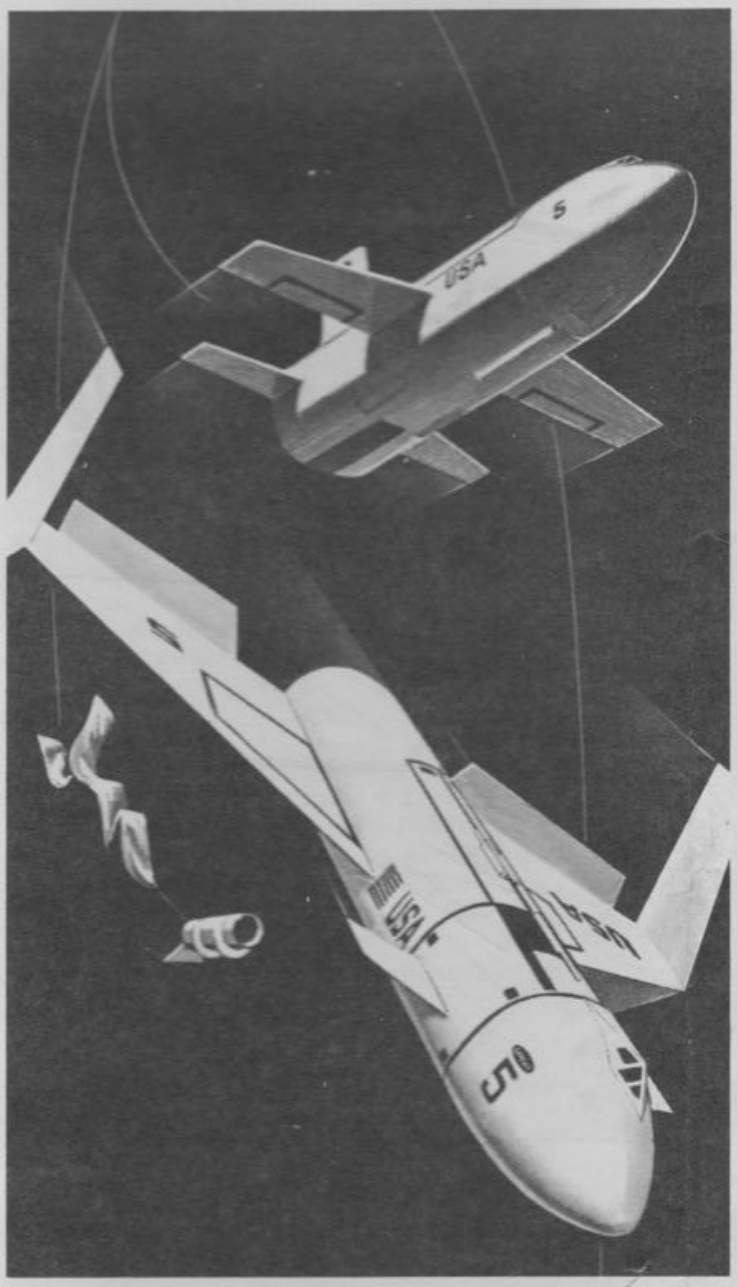

Centuri

Space Shuttle

Catalog No. KC-6

The SPACE SHUTTLE is CENTURI's simulation of current proposals now under study by NASA as an orbiting payload shuttle for future space flights. The SHUTTLE's three-way performance is fascinating for every rocketeer. As the SHUTTLE launches into flight, the shuttle craft separates and begins to glide slowly back to earth; the "power-pod" containing the expended engine returns via streamer, and the carrier ship glides earthward for landing.

TOOLS: In addition to the parts supplied, you will need the following materials to assemble and finish this kit. DO NOT use model airplane glue for building flying model rockets.



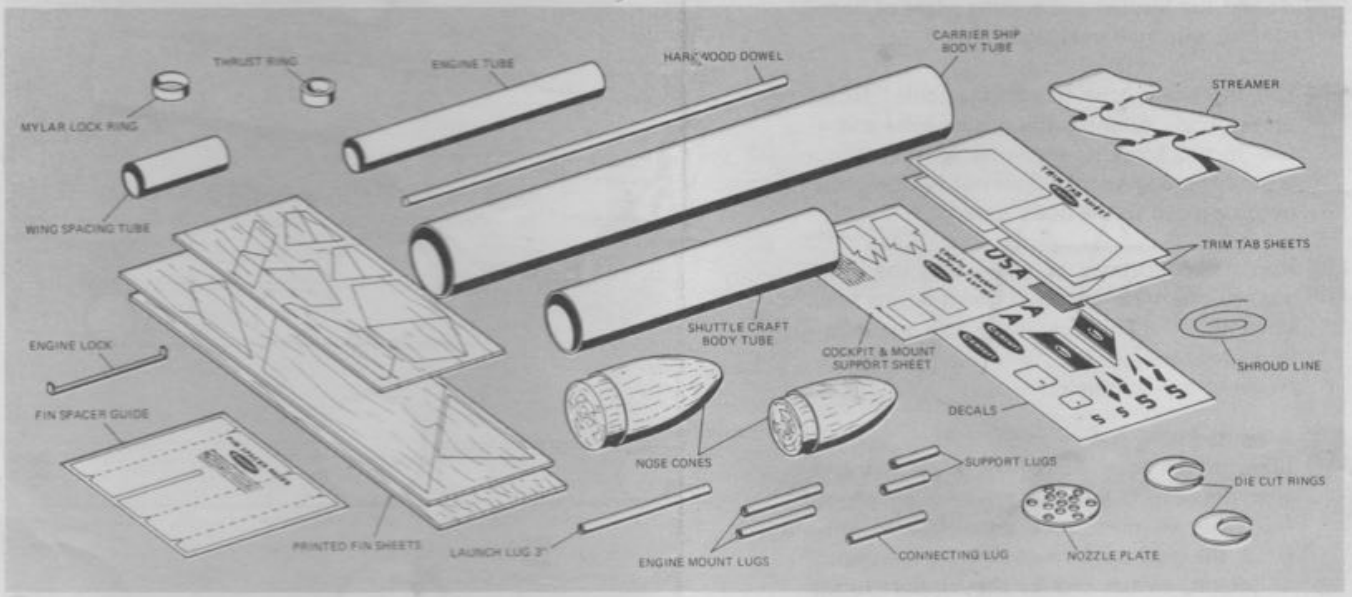

NOTE: Items not included in kit but required to fly the SPACE SHUTTLE are: engines, launching platform, firing panel, and battery.

Copyright 1970 Centuri Engineering Company

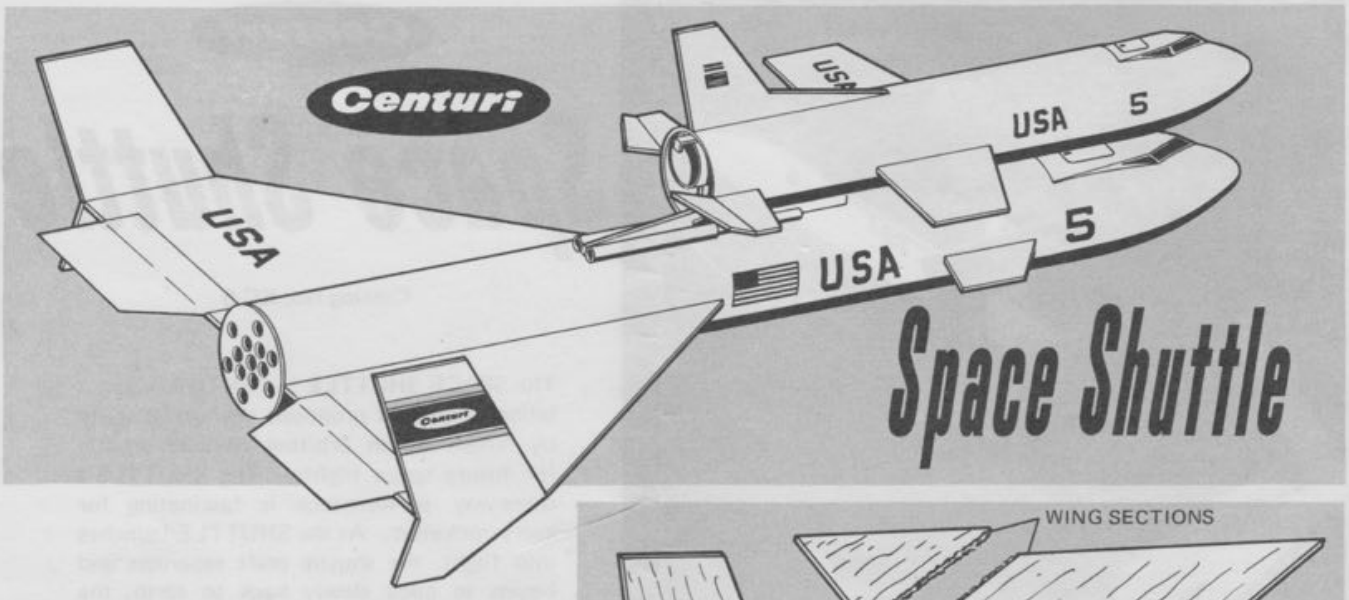

WING & STABILIZER ASSEMBLY

1 Carefully cut out balsa parts from printed sheet. Using fine sandpaper, square all edges.

2 Glue the inside trailing edge of the wings to the main pieces, laying both on a flat surface to dry. Wax paper spread on a table is ideal for this purpose as it protects table tops and glued pieces don't stick to wax paper.

3 Glue the upper and lower pieces of the vertical stabilizers together using the same method as in step 2. Allow both pieces to dry before proceeding.

4 Spread a thin film of glue along the root and outside edges of both wings and canards, allow to dry. This "pre-gluing" process will make the gluing of wings to body and stabilizers strong and easier.

5 Round the leading and trailing edges of both canards with fine sandpaper.

6 Lay the body tube flat on the table. Next to the body tube lay the engine tube and a few inches form it, the wing spacing tube. Besure the engine tube does not accidentally become glued to the body tube.

7 Run a second bead of glue along the root edge of one wing and lay it down on the two small tubes. Then carefully roll the wing into place against the body tube as shown. Allow to dry completely.

8 After the wing has dried completely, lay the tubes on the other side of the body tube and glue the second wing in place. Sight along the table to make sure wings are in line. After the glue on the second wing has begun to set up, switch one of the support tubes over to the other wing and allow the unit to dry as shown .

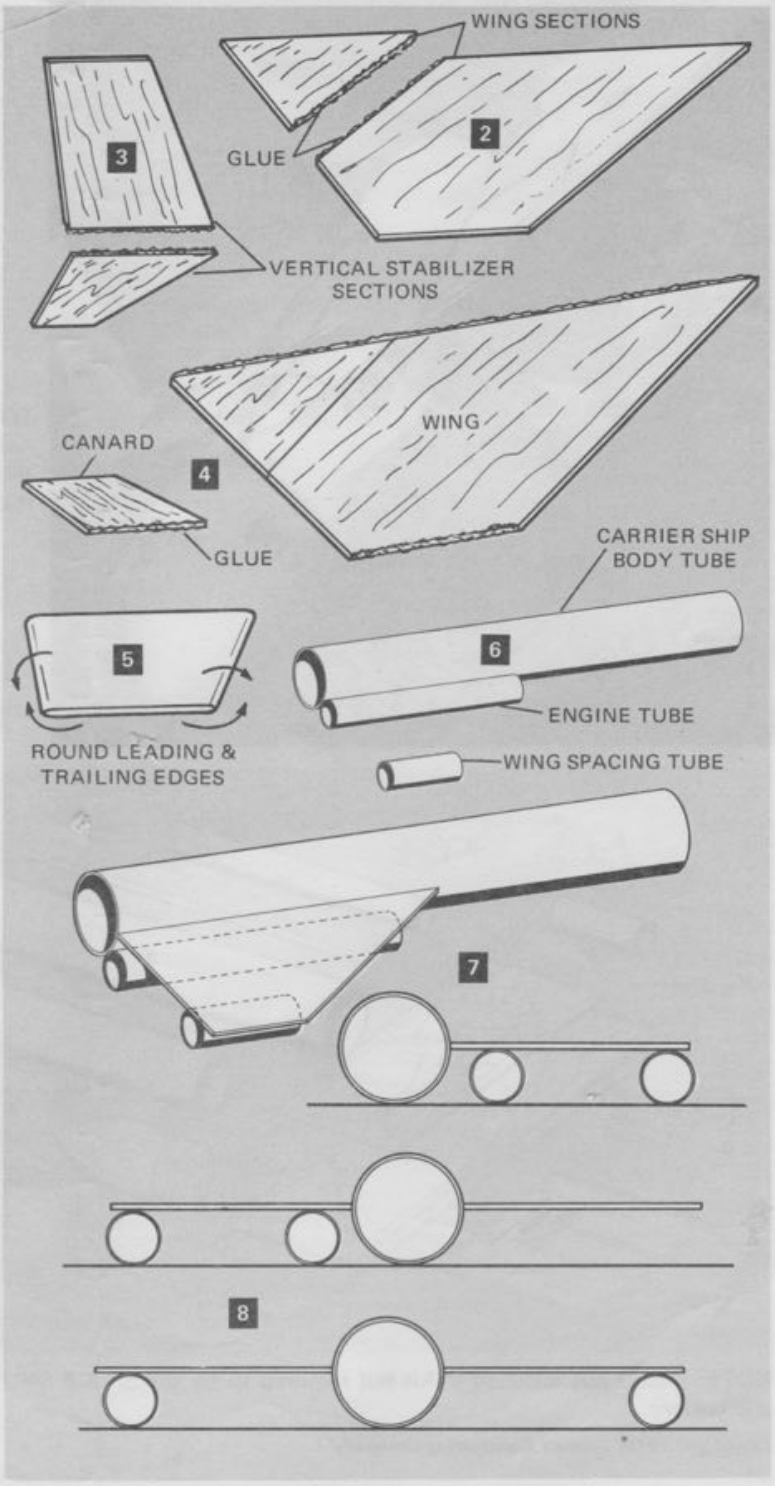

9 When both wings have dried, apply beads of glue along the body-wing joints and smooth out with your finger. Allow to dry, resting on supports as at the end of step 8.

Lie the mother ship flat. Roll the two support tubes against either side of the mother ship near the nose. Apply beads of glue to the root edges of the canards and press into place with the leading edge 3/8" from the end of the tube. Apply fillets of glue along joints and smooth with your finger.

10 Using first medium and then fine sandpaper, airfoil the leading and trailing edges of the wings. Support the undersides of the fins with your fingers and be sure the airfoils are on the same sides of both wings.

11 Apply a bead of glue to the outside edges of both wings and press the vertical stabilizers in place as shown. The tall section of the stabilizer should face up on the top (airfoiled) surface of the wing. Stand the unit up on the forward end of the body tube while the stabilizers dry in place.

12 Apply beads of glue to the wing-stabilizer joints and smooth out with your finger. Lay the glider flat while fillets dry.

13 Glue the launch lug in place along the bottom of the body tube as shown.

14 Cut the round dowel material into three pieces of 2 1/8" length and two pieces of 1 1/2". With your x-acto knife, scallop away part of the dowel for a length of 3/4".

15 Apply glue to the bottom surfaces of two of the scalloped pieces and press into place along the top of the body with the thin ends 5 3/4" from the rear end of the body tube. Use a scrap piece of balsa to space the two pins apart. The balsa piece should fit loosely between the two pins. Allow these pieces to dry in place.

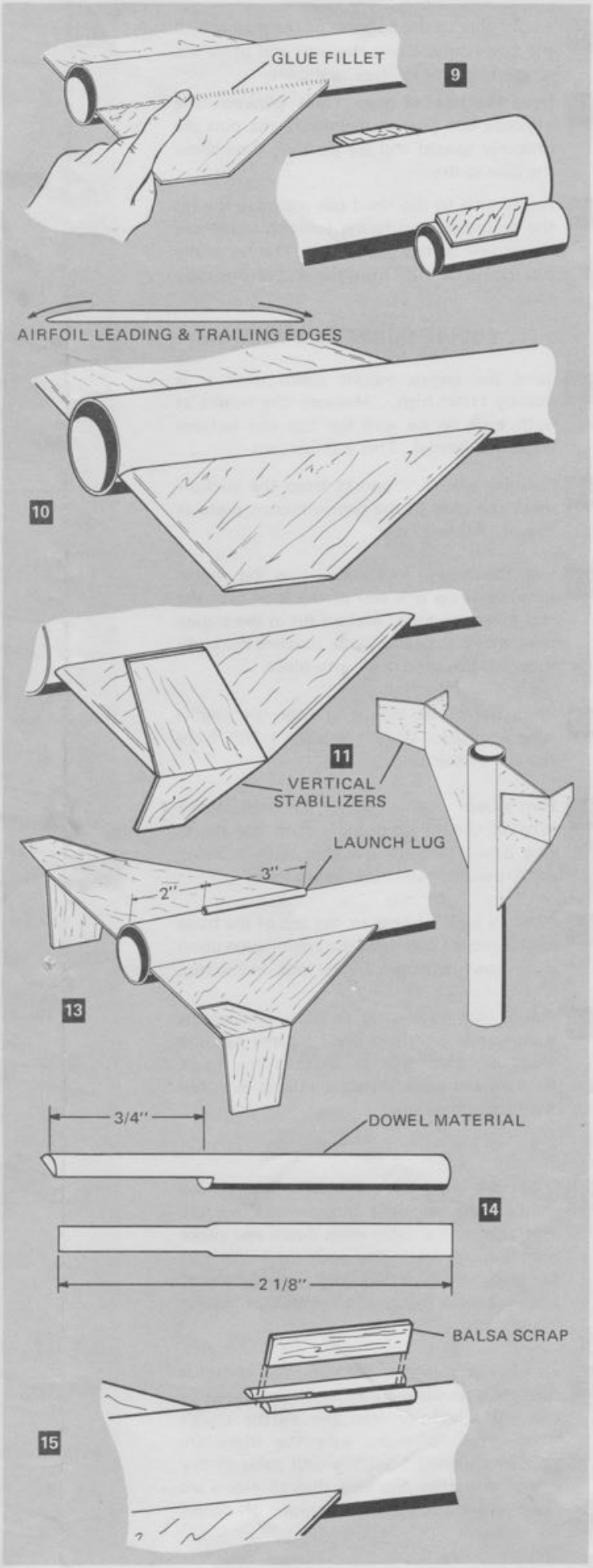

16 Apply glue to the outsides of the pins and to the body tube along the pins and press the supporting pins in place as shown.

17 Drop the piece of scrap balsa between the pins one last time to make sure the pins are properly spaced and are parallel, then allow the pins to dry.

18 Apply glue to the third pin and glue it with the scalloped end facing forward along the center line of the body tube. The tip of the pin should be 5/8" from the end of the body tube.

ENGINE MOUNT ASSEMBLY

19 Sand the engine mount down until it is exactly 11/16" high. Measure the height at both ends to be sure the top and bottom edges are parallel. This is important.

20 Cut the mount supports from the cockpit sheet and glue to the engine mount piece as shown. Allow to dry.

21 Lay the engine lock along side the engine tube, hooking one end of the lock over the end of engine tube. Make a slit in the engine tube where the other hook touches the body tube and push the hook into place.

22 Slide the mylar lock ring over the engine tube and lock. Glue it in place 1 1/2" from the end of the tube.

23 Run a bead of glue around the inside of the tube at the forward end. Push the thrust ring down through the glue with a pencil until it butts against the engine lock.

24 Apply a bead of glue to the top of the balsa engine mount and press the engine tube upon it as shown with the engine lock on the top.

25 Apply glue generously to both sides of the tube-mount joint and press a paper lug into place on each side to support the joint. Be sure the balsa standoff mount is in line with the engine tube.

26 Glue two more of the smaller lugs to the stem of the standoff as shown. Place the unit against the table stem down and make sure the lugs are in line with the bottom of the stem. Apply a fillet of glue to the top of both lug-stem joints and smooth with your finger.

27 Punch out the two die cut rings and glue into place on the engine tube as shown. Slide the unit carefully into the shuttle craft's body tube to make sure the disks are properly aligned. Set the unit aside to dry completely after checking that all pieces are lined up and haven't been bumped off center accidentally.

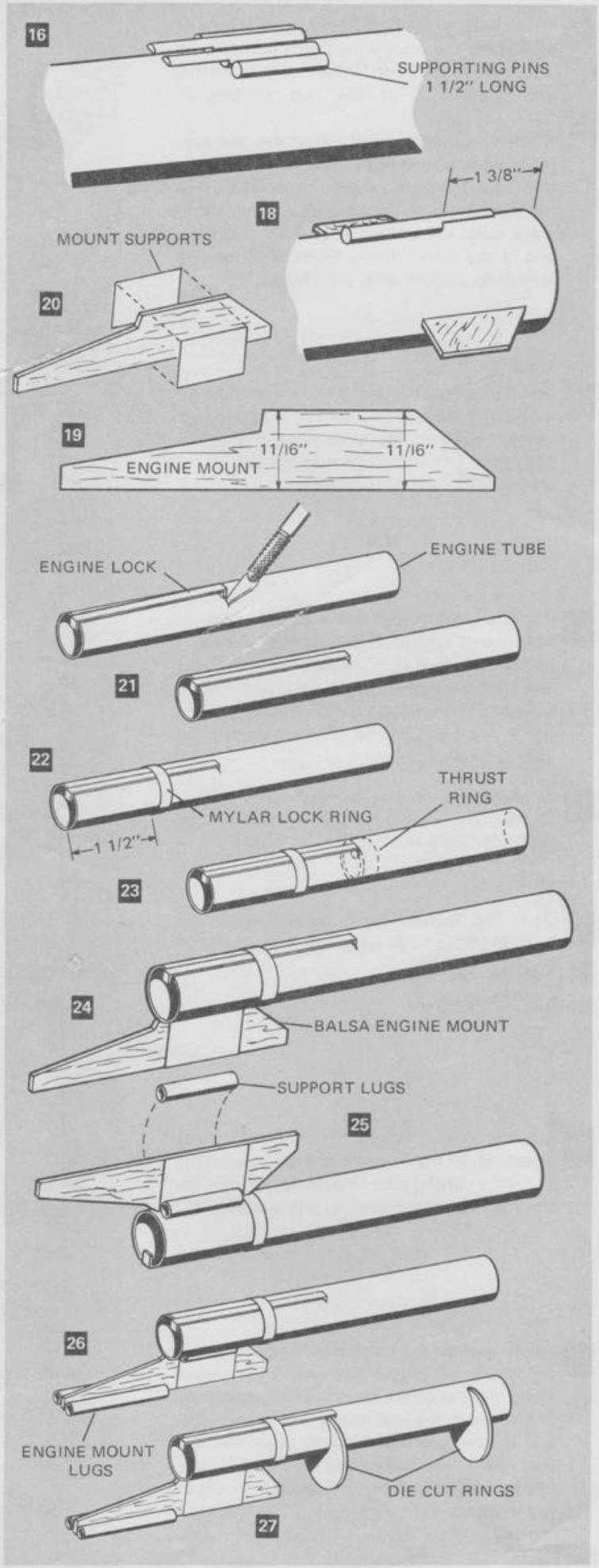

SHUTTLE CRAFT ASSEMBLY

28 Carefully cut out balsa parts from printed sheet. Using fine sandpaper, square all edges.

29 Glue the leading section to the tail as shown. Lay the assembly on a flat surface and place a ruler along the root edge to check alignment. Allow to dry.

30 Round the leading and trailing edges of the elevators.

31 Cut each elevator along the pre-marked line into two sections and round the inside edge of the narrower section.

32 Apply a bead of glue to the inside rounded edge of each leading section and push the trailing tabs into place.

33 Lay the two tabs on a flat surface with root edges facing each other and leading (narrow) sections forward. Lift the elevator (trailing) tabs up and roll a pencil under them so that the elevators rest with their trailing flaps up at about a 15% angle. Allow to dry before proceeding.

34 Round the leading and trailing edges of the tail assembly with fine sandpaper. Then apply a thin film of glue to the root edges of the tail assembly, both wings and both elevators. Allow to dry.

35 Cut out the fin spacing guide and wrap it around the shuttle body tube. Mark the locations of wings, tail, elevators and standoff slot with a pencil.

36 Apply beads of glue to the tail assembly, wings and elevators and press into place as shown. Stand the shuttle on end to dry.

37 Airfoil the upper leading and trailing edges of the wings with fine sandpaper.

38 Cut out the standoff slot with scissors and chop the corners of the slot as shown.

39 Glue the connecting lug to the bottom center of the shuttle craft with the forward edge 3/8" from the end of the tube. Be sure the lug is in line properly.

40 As the glue on the connecting lug sets up, slide the engine mount halfway into the shuttle. Then slide the engine mount forward along the body tube top engaging the lugs on the standoff with the pins on the mother ship. The standoff should slide freely on and off the pins. Sand carefully around the pins until it does so.

41 When the standoff is fully engaged by both pins, slide the shuttle back over the engine mount, engaging the lug under the shuttle body tube with the forward pointing single pin. The completed assembly should hold the shuttle in place with no shifting of the system back and forth. If necessary relocate the bottom lug on the shuttle for a firm grip. The two ships should exactly parallel each other.

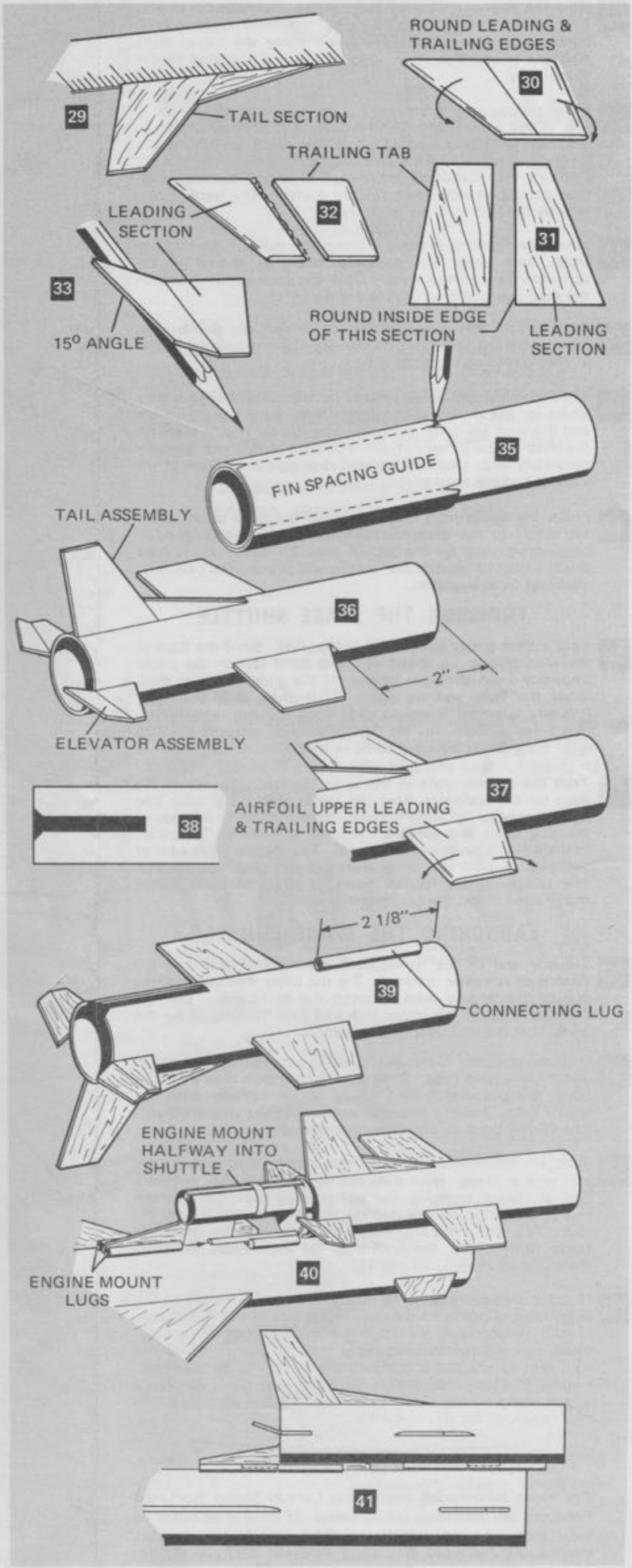

42 Glue the nose cones to the body tubes. Sand the cones with fine sandpaper and smear glue onto the lower faces of both cones with your finger. This will make the cones more resistant to damage from landing. Allow the glue to dry completely.

43 Paint the cones and fins with balsa fillercoat and allow to dry. Sand wood smooth and repeat proceedure until desired degree of finish is obtained. A certain compromise between finish quality and lightness is necessary – especially for the shuttle craft. Generally speaking, one or two coats of fillercoat should be maximum for the shuttle. The mother ship may be finished as finely as desired.

44 When the finishing process is complete, cut out the cockpits from their sheet and assemble them as shown in the accompanying instructions. Glue the cockpits in place on the nose cones of the respective gliders.

45 Cut the trim tabs for the mother ship from the gum-backed sheet and press into place as shown. There should be 1 1/4" of flap extending from the wing.

46 The recommended paint scheme for the space shuttle is gloss white for the mother ship, bright yellow for the space shuttle and black or silver for the pod. The die cut nozzle plate for the mother ship is very effective painted cherry red. Spray it separately and, when all paint is dry, glue it in place at the after end of the mother ship.

47 Following the printed instructions on the decal sheet, apply the decals to the space shuttle gliders as shown on the full perspective view on the top of page 2. After decals have dried, a coat of crystal clear acrylic will protect the paint and markings from scratches.

TRIMMING THE SPACE SHUTTLE

48 Find a clear grassy spot and face the wind. Bend the flaps of the mother ship up about 45° and hand launch the glider smoothly from shoulder height. If the glider tends to stall, lower the flaps and try again. If it dives, raise the flaps. Properly trimmed it should glide smoothly and land lightly. If it turns in flight, lift the flap on the side opposite the turn until the glider is trimmed to fly properly.

49 Trim the shuttle craft in the same manner. To adjust the flaps on the elevators, heat the joints over a lightbulb and bend slowly to the angle desired. Hold the flap in position as the glue cools and hardens. A small amount of "dihedral" in the wings is occasionally helpful. The shuttle takes a bit of patience to trim but once trimmed will glide realistically. The design is very rugged; don't be afraid to hand launch many times to get the best possible trim.

LAUNCHING THE SPACE SHUTTLE

50 Tie one end of the nylon cord around the center of the strands of streamer material. Tie the other end of the string around the engine tube between the bulkheads. Lift the forward hook of the engine lock and slide the loop under the hook. Let the lock snap back in place.

51 Fold the streamer material and lay it between the bulkheads under the engine tube. Slide the shuttle down over the disks (with the streamer folded inside) about halfway onto the engine tube. Insert a prepared engine into the engine mount. The C6-3 is the only engine recommended.

52 Slide the standoff forward on the mother ship locking the two pins in place. Now slide the shuttle craft back onto the engine mount engaging the bottom lug over the forward pointing holding pin located on the mother ship as you do this. The two ships are locked in place and the system is ready to fly. Place the system on the launch rail. Refer to the drawings in steps 40 and 41.

53 If there is a breeze blowing, position the space shuttle so the piggy back glider is on the down wind side of the launch rail. If your ignition wires are not long enough to reach the engine, make two extensions with paper clips as shown. Wire the sure shot to one end and attach the micro clip to the other. Repeat this proceedure with the other extension. Centuri's igniter-clip assembly (ECA-44) is made for this purpose and is recommended for this operation.

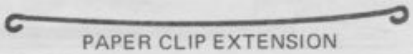

PAPER CLIP EXTENSION

For more information concerning Centuri Model Rocketry Products, see your local hobby dealer. If there is no dealer in your area, you may address inquiries directly to: Centuri Engineering Company, Box 1988, Phoenix, Arizona 85001.

