Vostok
1/63 scale

Parts list:

A) Nose Cone, turned from balsa
B) Fairing Tube, 2 3/8" Estes BT-60
C) Insulation, 5/8" Estes BT-60
D) Upper Stage Tube, 3" Estes BT-60 slit and reduced (or 2 Estes JT-60C's end-to end)
E) Upper Stage Base, from 1/16" basswood or plywood
F) Upper Stage Nozzle, from cardstock
G) Upper Stage Supports, (8x) from 1/16" basswood
H) Interstage Truss Octagon Ring, from 1/16" plywood
I) Interstage Struts, (16x) from 1/12" dowel
J) Blast Shield, cut from 1/16" basswood or plywood
K) Guidance Section, shoulder and 1/2" of exposed length cut from base of Estes PNC-60MS or PNC-60AH nose cone
L) 18" Shock Cord and Mount
M) 18" Parachute
N) Upper Core Tube, 3 1/2" Estes BT-60
O) Upper Core Shroud, from cardstock
P) Core Adapter Rings (2x), Estes AR-5560 from multipurpose ring set
Q) Core Max Diameter Support, from 1/16" plywood, 1.82" outside diameter
R) Lower Core Tube, 14 3/8" Estes BT-55
S) Launch Lug, 1/8" x 2 1/8"
T) Launch Lug Standoff, 1/4" x 2 1/8" from 1/16" plywood
U) Lower Core Shroud, from cardstock
V) D Engine Mount, Estes EM-5055/60
W) Booster Nose Cone (4x), 2 1/2" long hand turned or trimmed down from Estes BNC-20R
X) Inner Booster Tube (4x), 9" Estes BT-20
Y) Booster Shroud (4x), from cardstock
Z) Booster Base (4x), 2 1/2" Estes BT-60
AA) Booster Adapter rings (8x), Estes RA-2060
AB) Booster Shroud Supports (4x), 3/8" sections of slit Estes BT-60
AC) Booster Fins (4x), from 1/16" basswood
AD) Booster Standoff (4x), 1/16" x 1/8" x 7" basswood
AE) Booster Brace (4x), from 1/16" x 1/16" basswood strips

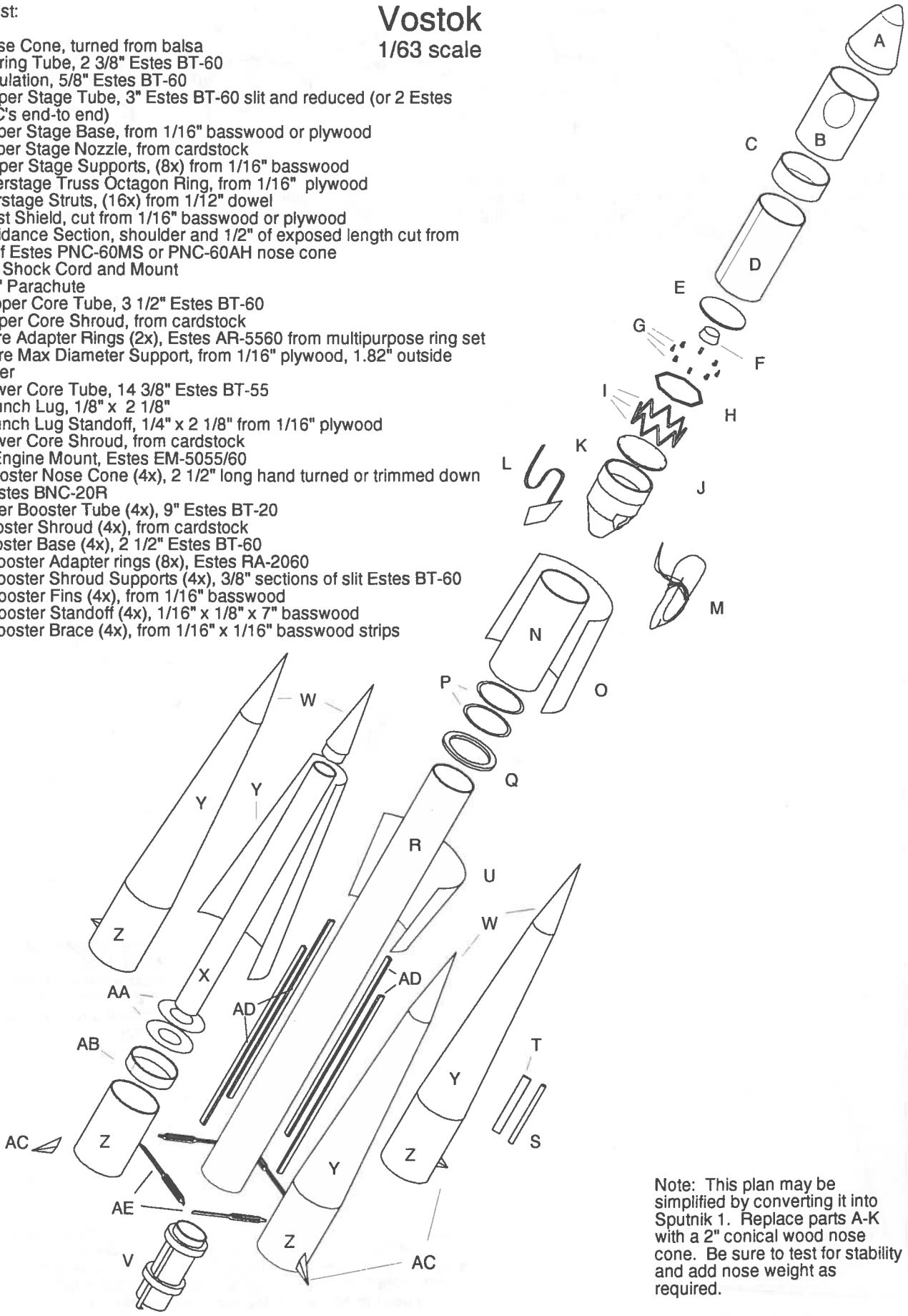

Note: This plan may be simplified by converting it into Sputnik 1. Replace parts A-K with a 2" conical wood nose cone. Be sure to test for stability and add nose weight as required.

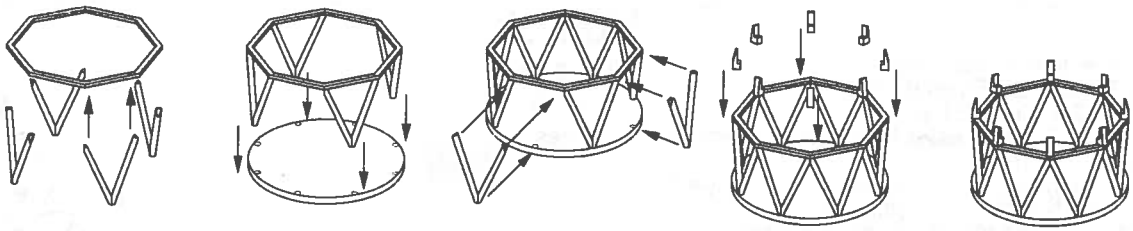

Interstage struts: Glue interstage struts (I) into V's over pattern. Glue four V-shaped pairs to the octagon ring (H). While glue is still slightly soft, glue this assembly to the blast shield (J). Once glue is dry, glue remaining four pairs of struts into place. Glue upper stage supports (G) to octagon ring, checking position against upper stage tube (D). Base of upper stage tube should fit into notch in upper stage supports.

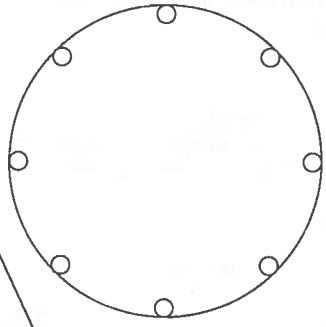

Blast Shield (J):
Make from 1/16" basswood or plywood. Mark small circles for attaching interstage struts.

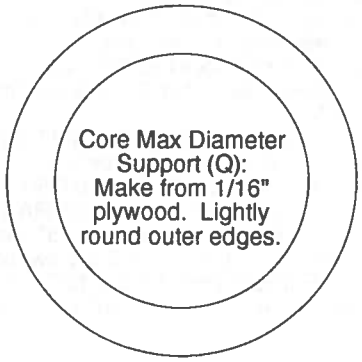

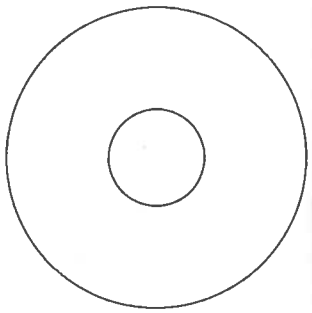

Upper Stage Base (E):
Make from 1/16" basswood or plywood. Mark inner circle for attaching upper stage nozzle.

Booster Shroud (Y):
Cut four from cardstock or paper (make plenty of extra copies). Cardstock will be stronger (so strong you may be able to leave out the booster core tube and booster adapter rings), but is difficult to roll. If you use cardstock, cut tab from shroud and glue to inside of joint.

Upper Core Shroud (O):
Cut from cardstock, roll into cone.

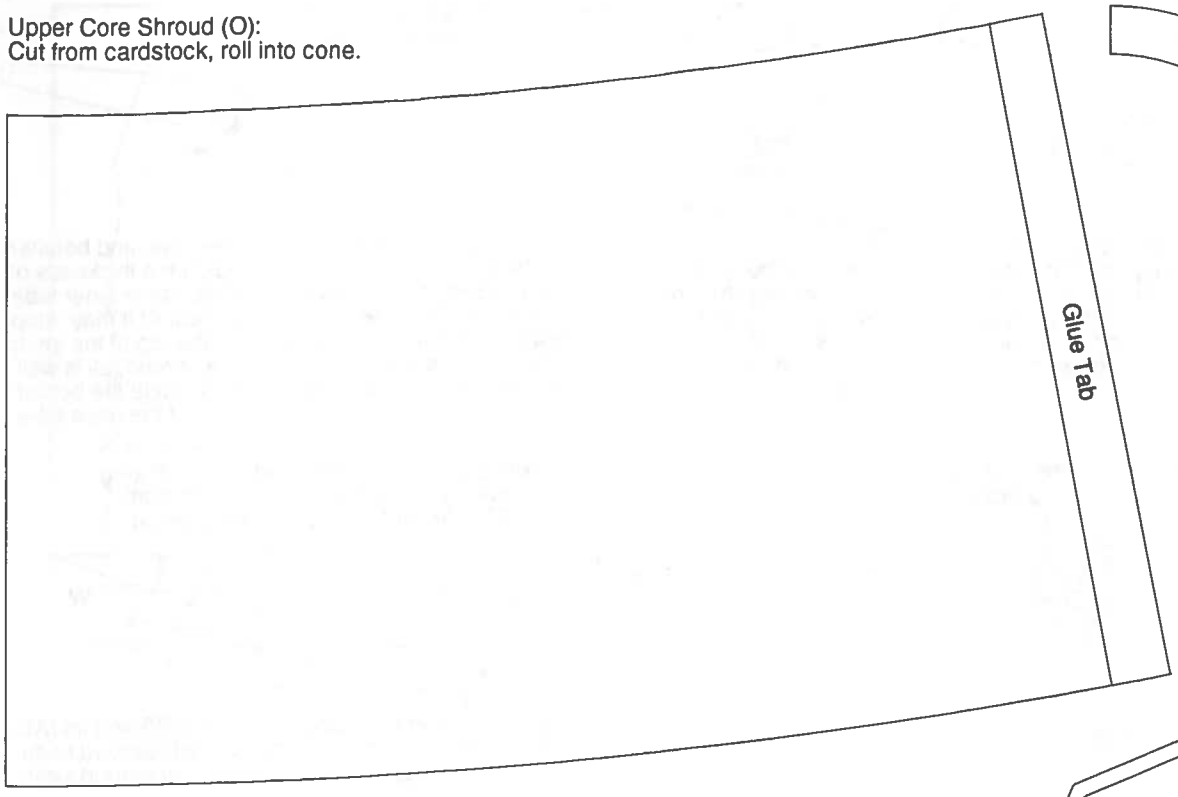

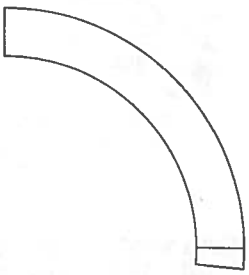

Upper Stage Nozzle (F):
Cut from Cardstock, roll into cone.

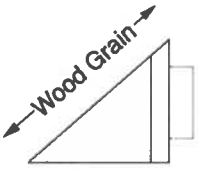

Fins (AC):
Make four from 1/16" basswood. Sand leading and trailing edges sharp. Tab for through-the-wall attachment is optional.



Interstage Struts (I):
Make 16 from 1/12" dowel, glue together into 8 V-shaped pairs.



Interstage Truss Octagon Ring (H):
Make from 1/16" plywood. Sand edges round.



Upper Stage Supports (G):
Make eight from 1/16" basswood or plywood

Lower Core Shroud (U):
Cut from Cardstock, roll into cone.

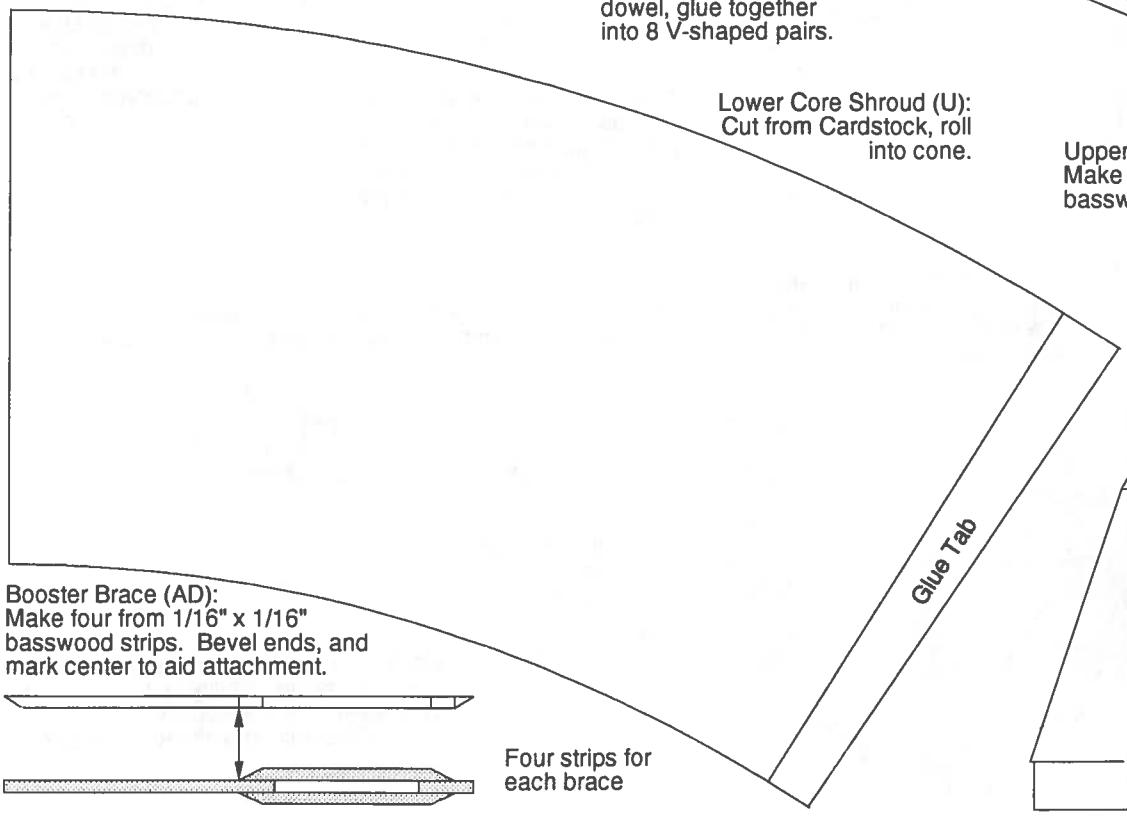

Nose Cone (A):
Turn from balsa.

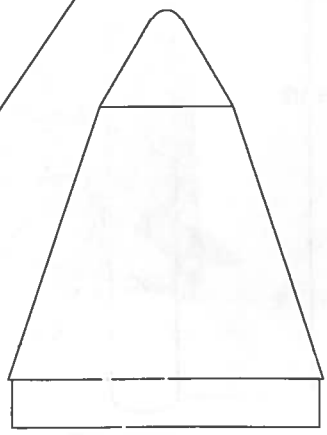

Booster Brace (AD):
Make four from 1/16" x 1/16" basswood strips. Bevel ends, and mark center to aid attachment.

Four strips for each brace

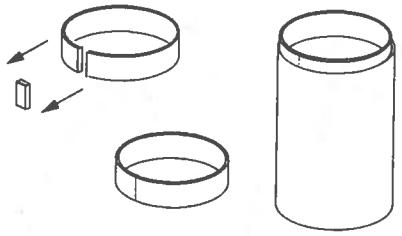

Cut a 1/16" slice from each 3/8" long booster shroud support (AB). The remaining slit ring should fit tightly inside the end of a BT-60 booster base tube (Z). Trim shroud support to fit if needed, and glue into booster base protruding 3/16".

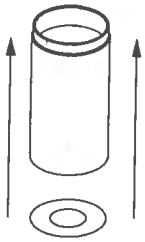

Glue one booster adapter ring (AA) into the booster base. Press it all the way up against the shroud support.

Glue one booster adapter ring (AA) to the base of an inner booster tube (x).

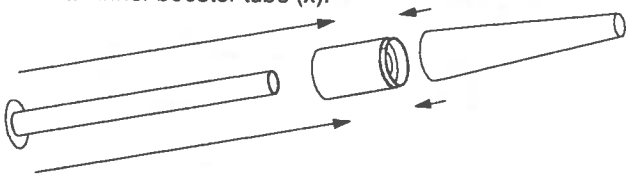

Dry fit booster base, inner booster tube, and booster shroud (Y) together. Depending on the thickness of the booster shroud material, the top of the inner tube may fit flush with the top of the shroud, or it may stop as much as 1/4" short. As long as the top of the inner tube supports the upper end of the shroud, all is well. Apply glue to the adapter ring joint inside the bottom of the base tube.

Remove shroud from booster base and inner tube, and apply glue to adapter ring joint inside front of base.

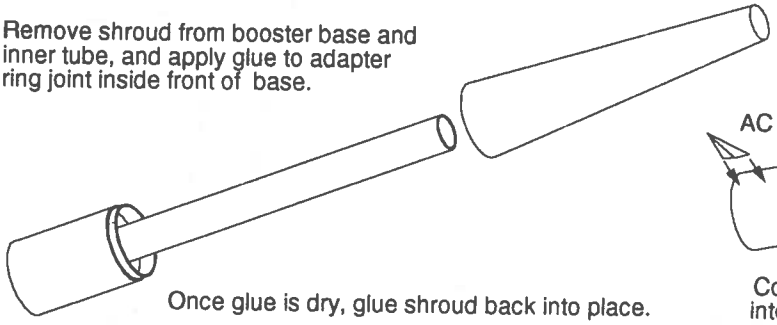

Once glue is dry, glue shroud back into place.

Booster nose cone should be 2 1/2" long. Turn nose from balsa, or trim 1/4" from BNC-20R and sand down into conical shape.

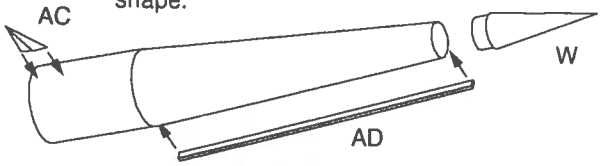

Complete booster by gluing nose cone (W) and fin (AC) into place. Be sure fin is directly opposite shroud seam. Glue booster standoff (AD) over shroud seam.

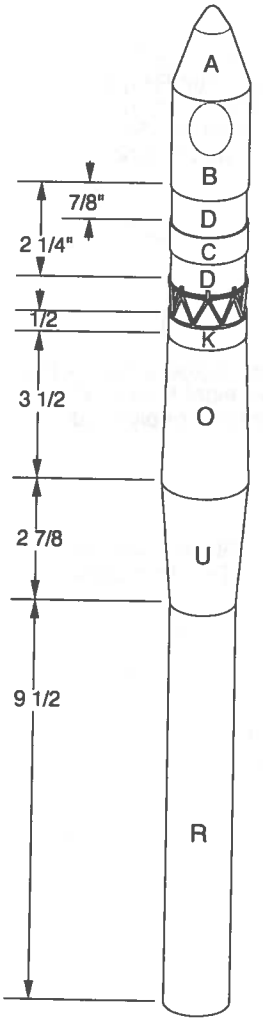

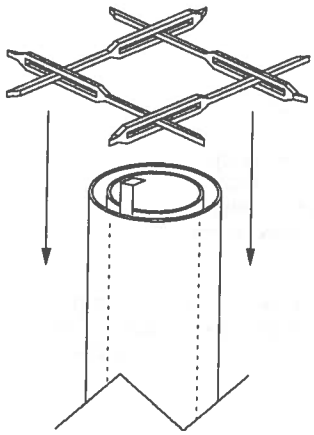

Assemble core components following exploded diagram, positions and spacings of core parts are shown at left.

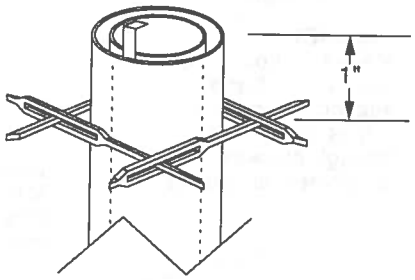

Assemble four booster braces (AD) as shown. Glue them into place 1" from the bottom of the core tube. Line up centers of braces with booster placement lines.

For additional details, study drawing of prototype on next page.

Glue boosters to core with glue along booster stand offs and on booster braces.

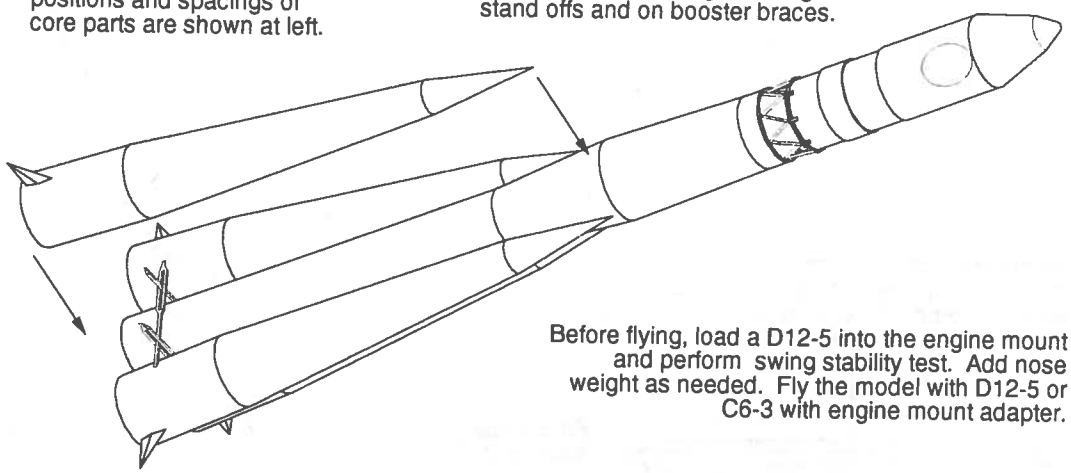

Before flying, load a D12-5 into the engine mount and perform swing stability test. Add nose weight as needed. Fly the model with D12-5 or C6-3 with engine mount adapter.

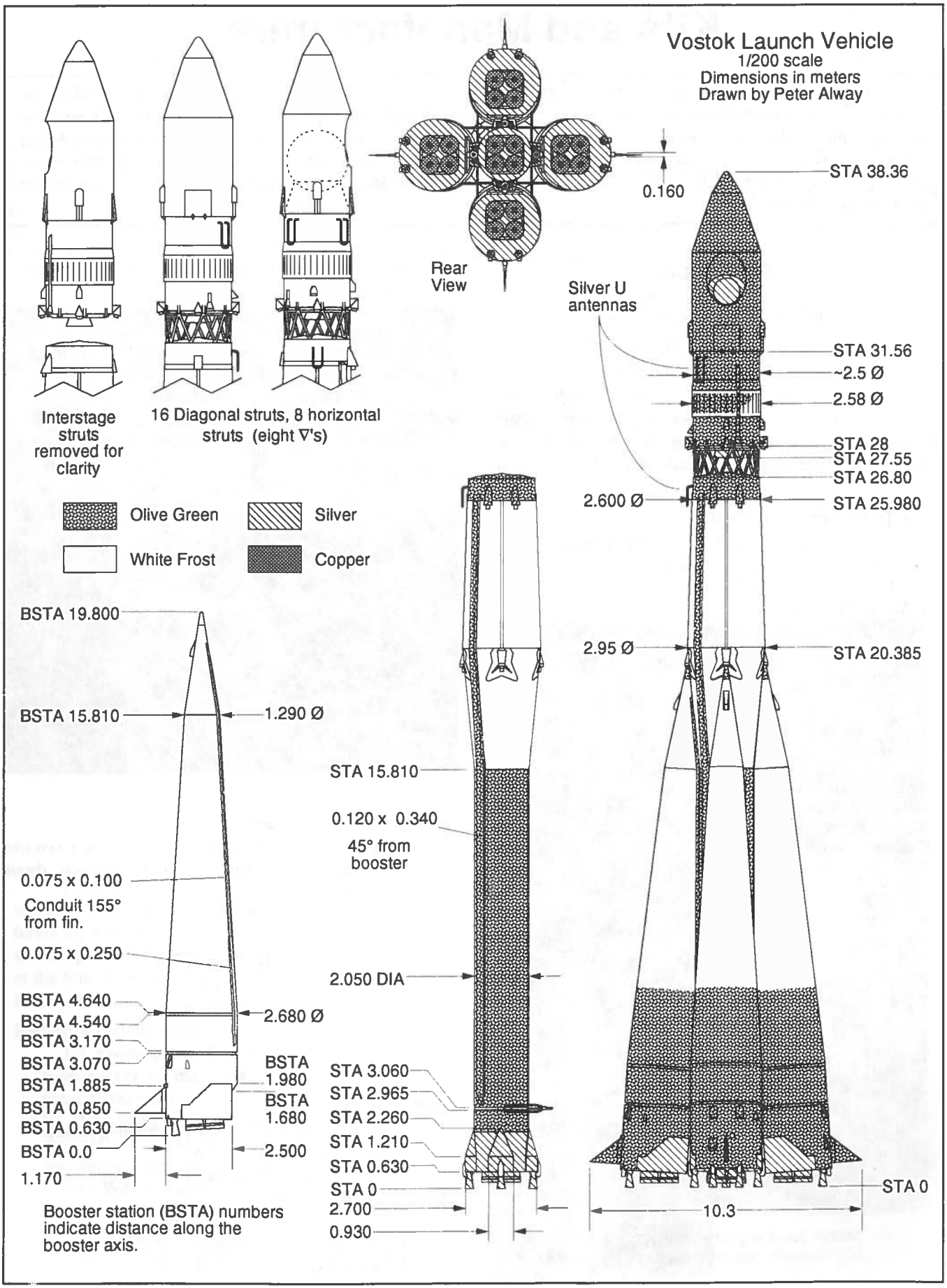
Vostok Launch Vehicle
1/200 scale
Dimensions in meters
Drawn by Peter Alway
Rear View
0.160
STA 38.36
Silver U antennas
STA 31.56
~2.5 Ø
2.58 Ø
STA 28
STA 27.55
STA 26.80
2.600 Ø
STA 25.980
2.95 Ø
STA 20.385
STA 0
10.3
Interstage struts removed for clarity
16 Diagonal struts, 8 horizontal struts (eight ∇'s)
Olive Green
Silver
White Frost
Copper
BSTA 19.800
BSTA 15.810
1.290 Ø
0.075 x 0.100
Conduit 155° from fin.
0.075 x 0.250
BSTA 4.640
BSTA 4.540
BSTA 3.170
BSTA 3.070
BSTA 1.885
BSTA 0.850
BSTA 0.630
BSTA 0.0
2.680 Ø
BSTA 1.980
BSTA 1.680
2.500
1.170
Booster station (BSTA) numbers indicate distance along the booster axis.
STA 15.810
0.120 x 0.340
45° from booster
2.050 DIA
STA 3.060
STA 2.965
STA 2.260
STA 1.210
STA 0.630
STA 0
2.700
0.930