HOW IT WORKS

At peak of flight, the Mini-Motor's ejection charge ignites, pushing out the nose cone and streamer. At the same time, the sudden backwards force of the ejection charge disengages the glider from its mount. The pad assembly descends safely to Earth on its streamer, while the glider circles and soars gracefully. The glider can fly for several minutes if properly flight trimmed.

The MINI-DACTYL obtains gliding ability because the canard is at a slight incidence to the wings. This incidence angle is pre-cut in the body strip (boom).

TOOLS YOU WILL NEED

- Superbond Glue (or "white" glue)
- Modeling Knife
- Pencil & Masking Tape
- Fine Sandpaper
- Paint (see painting instructions for options)

MAIN ASSEMBLY INSTRUCTIONS

This "Kustom Kit" may be built in either one of two styles. The easier, and recommended style is shown on this side of the instruction sheet. Tips on building the slightly more challenging alternate version are shown on the reverse side. You must read the steps on this side to familiarize yourself with the basic assembly, even if you plan to build the alternate version.

This single-glider version is best suited for hi-altitude, long duration flights. We suggest that you still assemble both gliders, and keep the second one as a spare . . . small gliders can easily fly out of sight, especially when launched with a "B" motor.

These steps skip from one part to another, so that the glue joints on each assembly can be drying while you are working on another. Be sure to glue each joint neatly and carefully, so the MINI-DACTYL can withstand flight stresses.

1 Start assembly by choosing the Motor tube (2½" long). Run a small glue bead around the inside of one end, and around the outside of the thrust coupler.

Join the parts with a firm, turning motion until the coupler is about half way in.

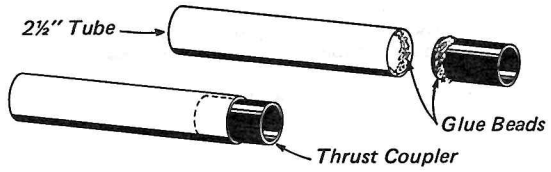

2 Identify the balsa parts shown below. Remove them carefully from their sheets as you need them, but avoid tearing the balsa.

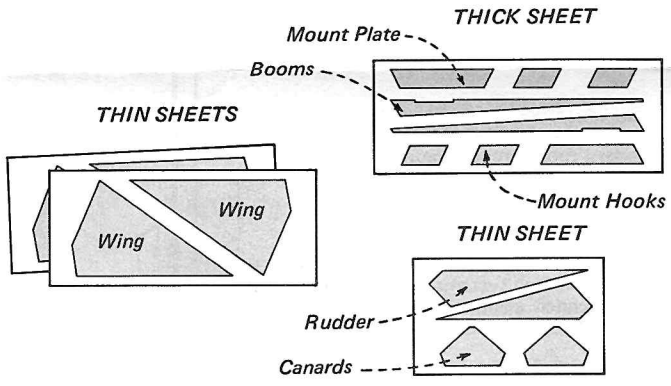

3 Run each wing edge over fine sandpaper to insure straight edges. Sand a slight bevel on each wings root edge and glue the wings together. Allow to dry on a flat surface, propping one wing with the canard, as shown.

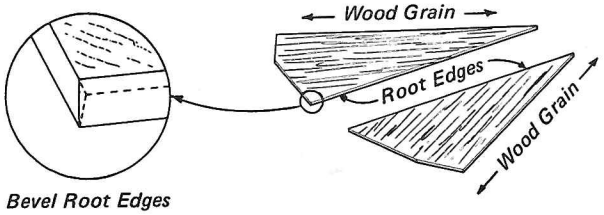

Centuri Engineering Company, P.O. Box 1988, Phoenix, Arizona 85001

Mini-Dactyl

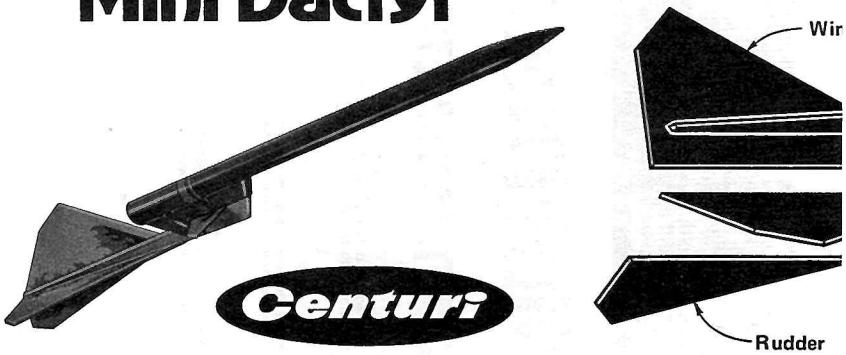

(STEP 3 CONTINUATION)

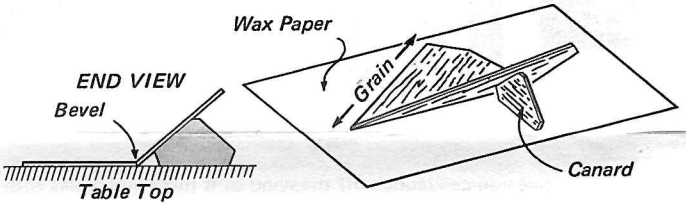

IMPORTANT: Be sure to align the wing sections so that the wood grain is parallel to the leading edge.

4 Assemble the pod mount, and hold until glue starts to set.

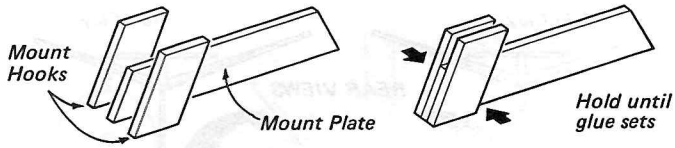

5 Glue the canard into its slot in the boom. Lay the assembly upside down to dry on your work table.

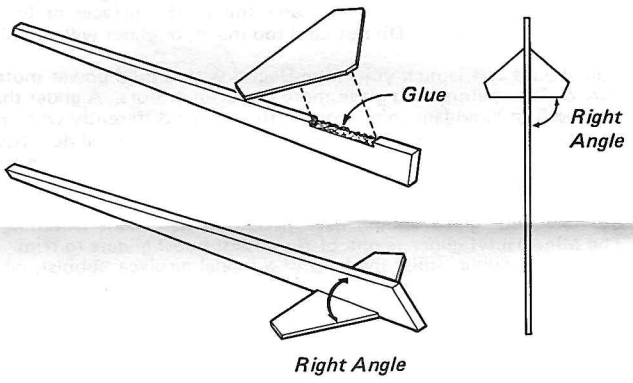

6 Apply glue around the coupler and around the inside of the main body tube. Join with a firm, turning motion and wipe away excess glue.

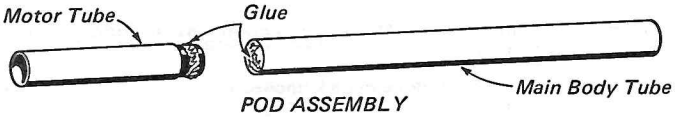

POD ASSEMBLY

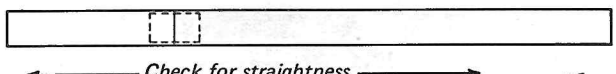

Find a convenient groove or channel, such as a door jamb or partially open drawer. Draw a straight guide line the length of the tube, for the mount to be glued on later.

