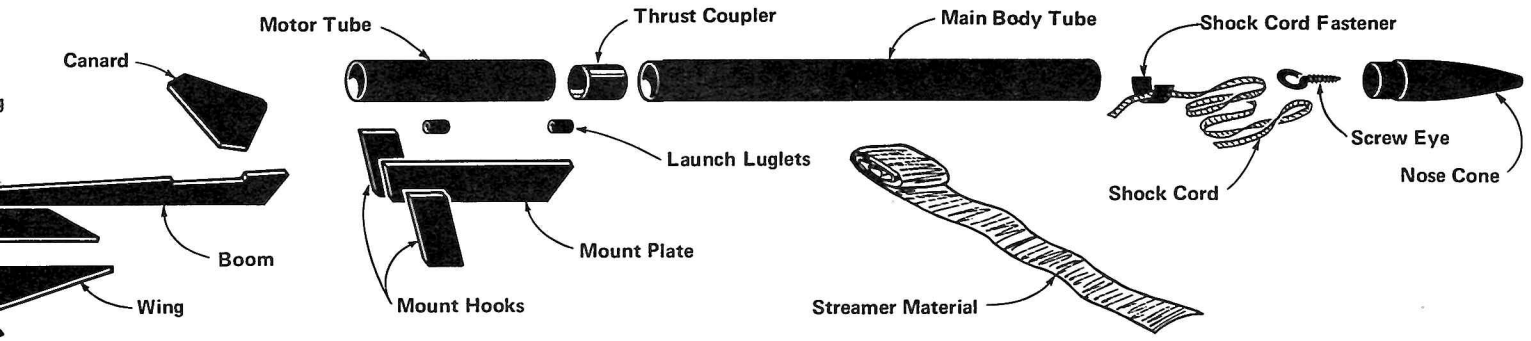

7 Screw the metal screw eye into the center of the nose cone base. Unscrew it and squirt a drop of glue into the hole. Re-screw the eye in place.

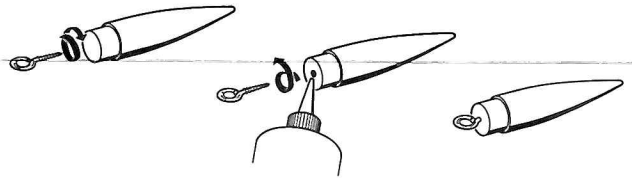

8 Tie one end of the shock cord around the heavy paper shock cord fastener (½" x 1"). Bend it neatly into a half-circle and apply glue to the entire outside surface.

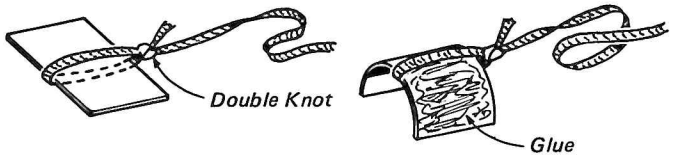

9 Insert the assembly into the open end of the main body tube. Make sure it's at least 3/4" into the tube, to allow for the nose cone to be inserted later. Rub the fastener down firmly with eraser end of pencil, and hold until dry.

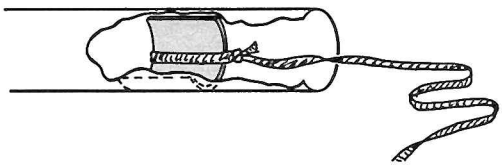

10 Tie the other end of the shock cord thru the nose cone screw eye . . . use a double knot, and trim off excess cord.

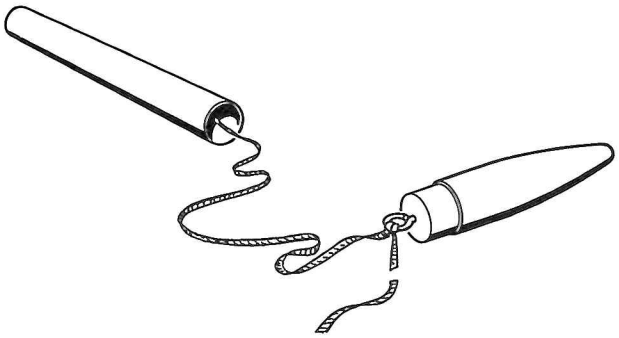

11 We have supplied more streamer material than you can actually use at one time . . . Cut off about 24" for this kit, and save the rest for repairs or replacement later.

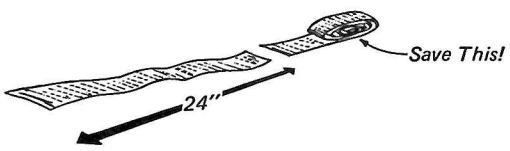

12 Attach one end of the 24" streamer to the middle of the shock cord with masking tape. Be sure it is on firmly . . . add a staple if you can.

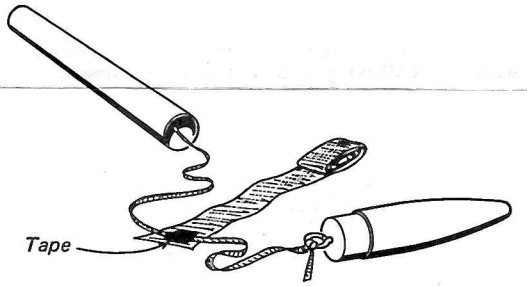

13 Glue the boom along the wing's centerline . . . be sure to align the parts symetrically. Hold with tape or pins, until dry.

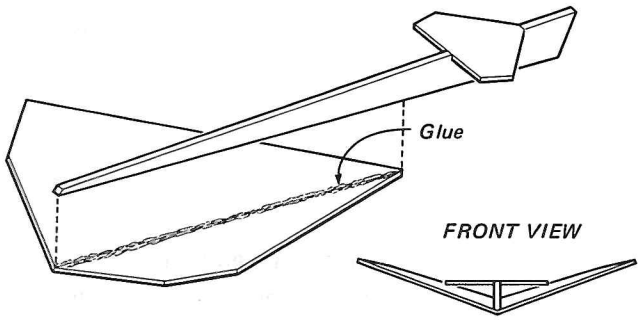

14 Prepare the mount assembly for gluing onto the body. Wrap fine sandpaper around the body, and rub the mount along it to obtain a curved underside.

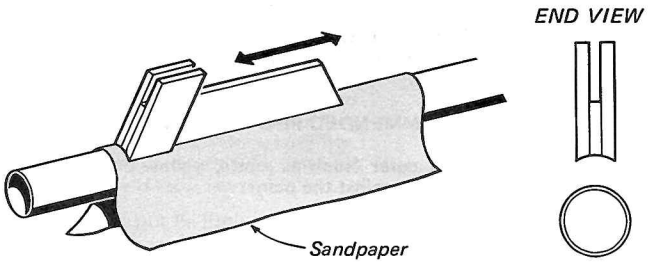

15 Glue the mount assembly in place onto the motor tube, aligning it along the line drawn in an earlier step.

