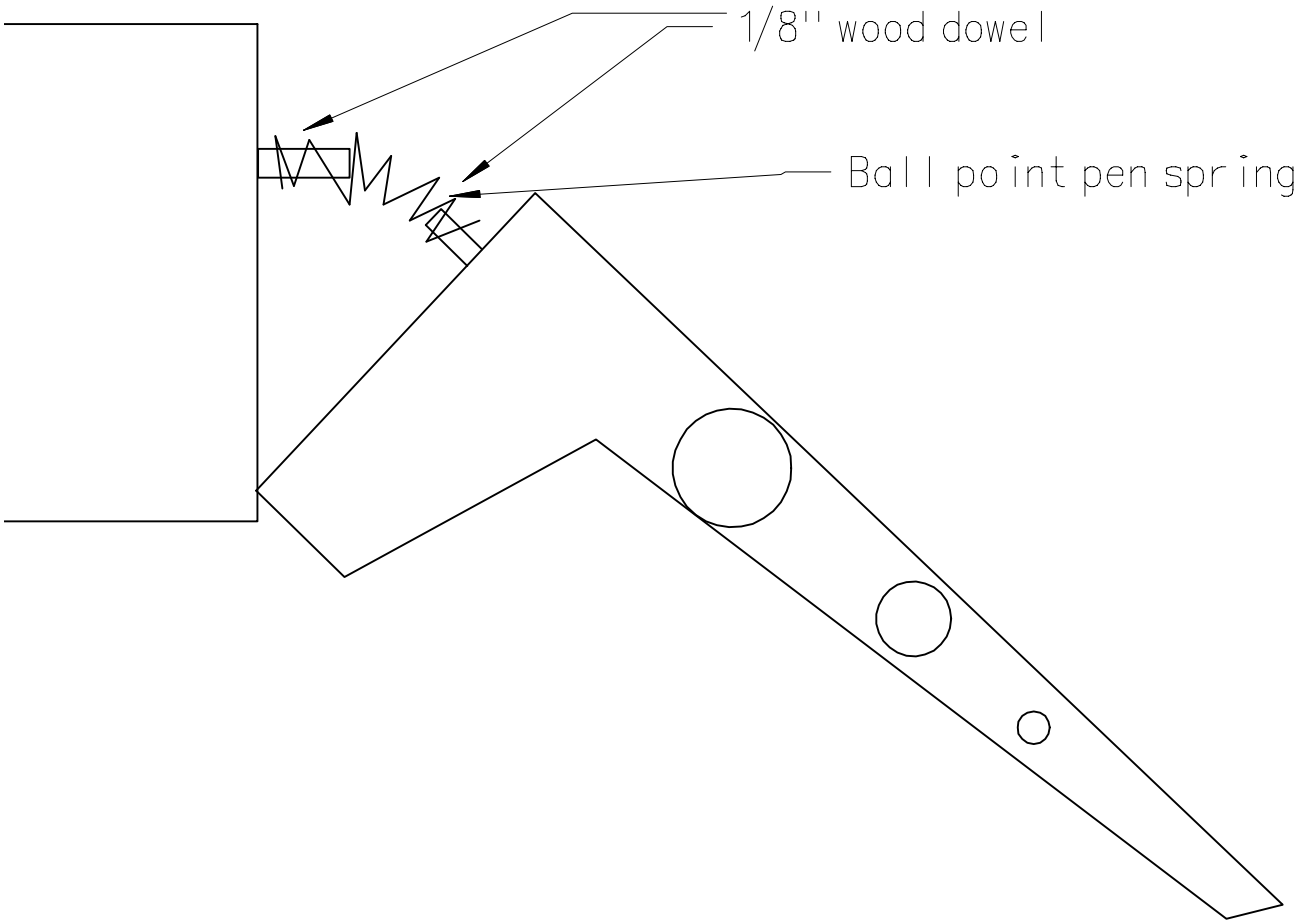
1/8'' wood dowel
Ball point pen spring