TIGER STREAK

SKILL LEVEL 3 - Recommended for Craftsman Rocketeers.

RECOMMENDED ENGINES:
Booster Stage: A8-0 (First Flight), B6-0, C6-0.
Upper Stage: 1/2 A6-4 (First Flight), A8-5, B4-6, B6-6, or C6-7.

BEFORE YOU START

Read each step and study the accompanying drawings before doing any of the work called for in that step. Make sure you have all parts and materials. Check off each step as you complete it. Always test-fit parts together before applying glue. It will sometimes be necessary to sand edges of rings, tubes, etc. to obtain proper fit. If you are in doubt about the relative size or location of some parts, refer back to this exploded view drawing for clarification. Adequate glue joints are very important for a flying model rocket. Follow the instructions carefully in this regard.

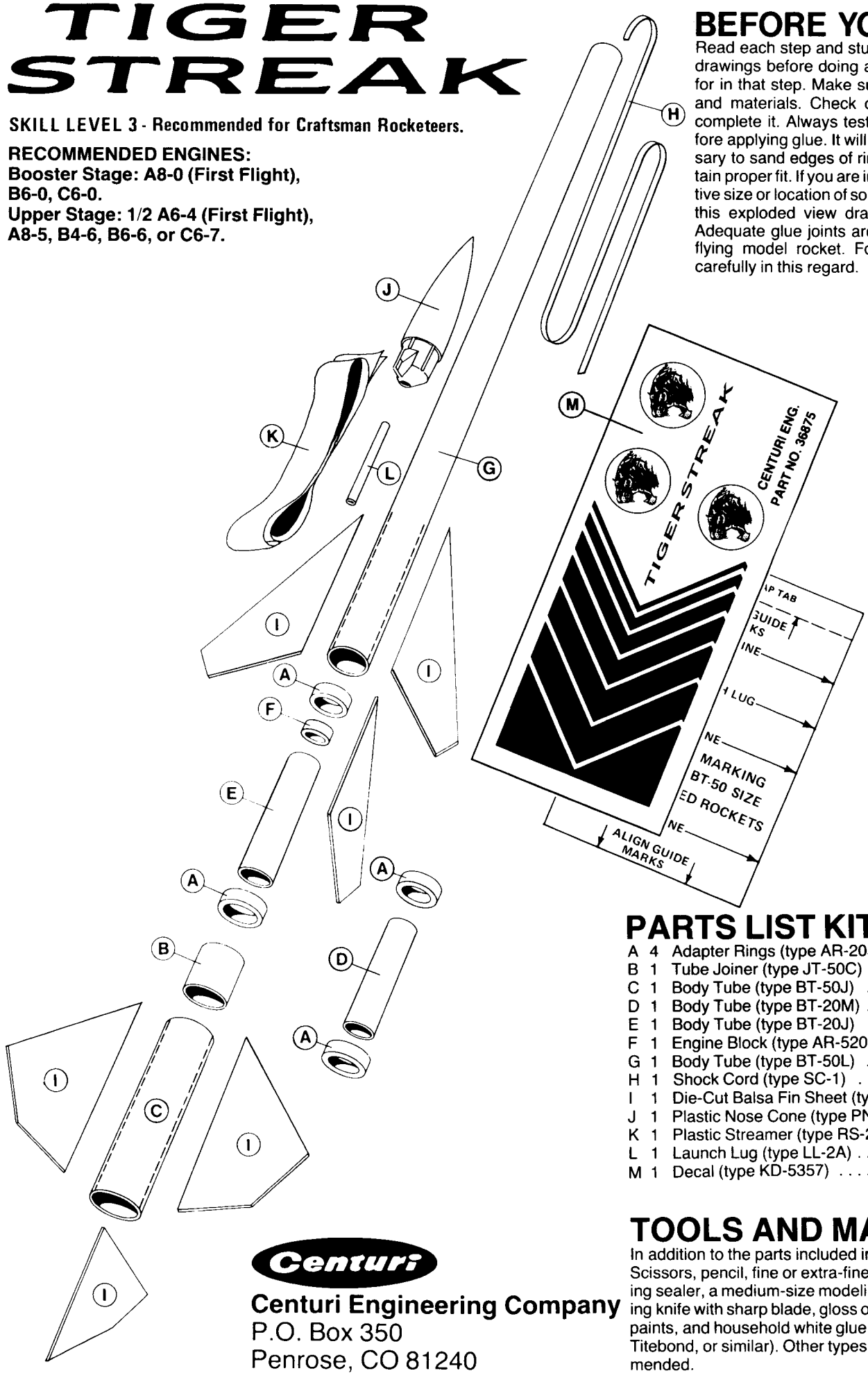

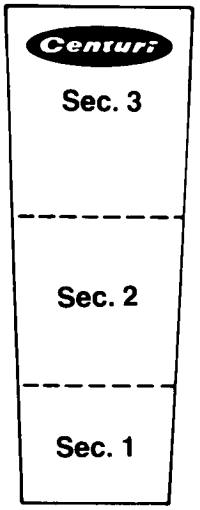

SHOCK CORD MOUNT
(to be cut out here)

PARTS LIST KIT NO. 5357

A	4	Adapter Rings (type AR-2050)	30164
B	1	Tube Joiner (type JT-50C)	30260
C	1	Body Tube (type BT-50J)	30362
D	1	Body Tube (type BT-20M)	30334
E	1	Body Tube (type BT-20J)	30326
F	1	Engine Block (type AR-520)	30162
G	1	Body Tube (type BT-50L)	30366
H	1	Shock Cord (type SC-1)	85730
I	1	Die-Cut Balsa Fin Sheet (type BF-1388)	32397
J	1	Plastic Nose Cone (type PNC-50KA)	71028
K	1	Plastic Streamer (type RS-20)	38278
L	1	Launch Lug (type LL-2A)	38175
M	1	Decal (type KD-5357)	36875

TOOLS AND MATERIALS

In addition to the parts included in this kit you will need: Scissors, pencil, fine or extra-fine grit sandpaper, sanding sealer, a medium-size modeling paint brush, modeling knife with sharp blade, gloss orange and black spray paints, and household white glue or resin glue (Elmer's, Titebond, or similar). Other types of glue are not recommended.

Centuri
Centuri Engineering Company
P.O. Box 350
Penrose, CO 81240

ASSEMBLY INSTRUCTIONS

☐ 1

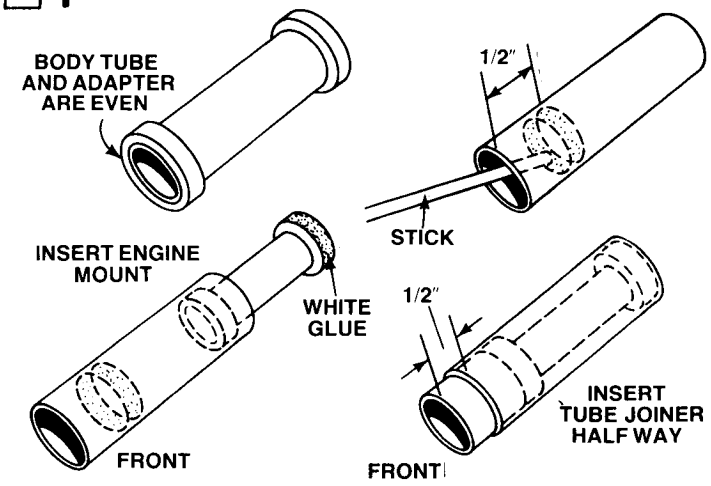

Locate the following items: Two adapter rings (part A), the tube joiner (part B), the 2-3/4" BT-50J body tube (part C), and the 2-1/4" BT-20M body tube (part D). Note: There are two BT-20 type body tubes. The BT-20M body tube is the shorter of the two. Glue an adapter ring to each end of the BT-20M body tube so that the ends of the rings are even with the ends of the body tube. Use a stick to apply a ring of glue 1/2" inside one end of the BT-50J body tube. Slip the BT-20M unit in part way in the opposite end with out touching the glue as shown. Apply a bead of glue around the exposed adapter ring and push the unit in the rest of the way until the tube ends are even. Wipe off any excess glue. Apply glue to the inside front of the BT-50J body tube and push in the tube joiner until it rests against the adapter ring. The joiner should now extend 1/2" from the end of the tube. Wipe off any excess glue and set the unit aside to dry.

☐ 2

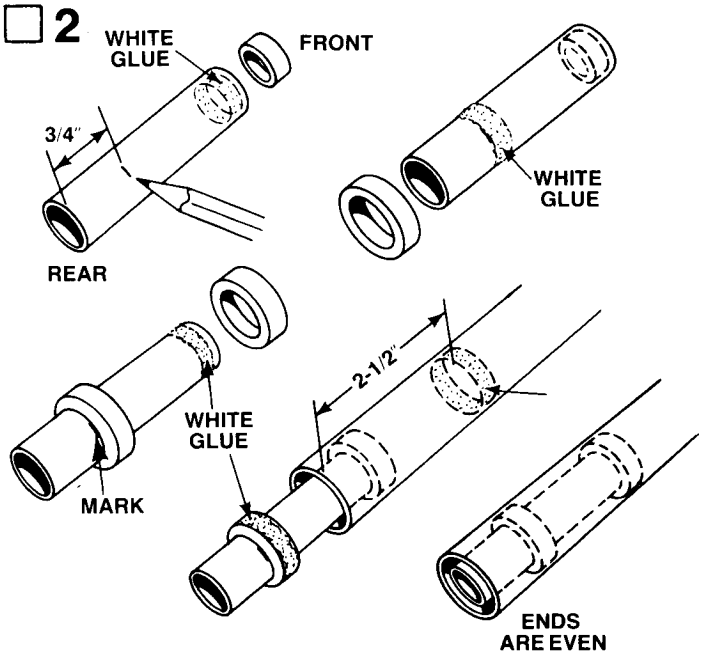

Locate the two remaining adapter rings, the BT-20J body tube (part E), the engine block (part F), and the main body tube (part G). Glue the engine block into the BT-20J body tube flush with one end. This will be referred to as the front of the tube. Measure 3/4" from the REAR of the tube and mark with a pencil. Apply glue above this mark and slide an adapter ring over the rear of the tube and push it up into the glue. The rear of the ring should be on the pencil mark. Glue the last adapter ring onto the front of the engine tube even with the end of the tube. Let the glue dry before proceeding. Use a stick to apply a generous amount of glue around the inside of the main body tube about 2-1/2" from one end as shown. Using one smooth motion, slide the engine mount into the main body tube FRONT END FIRST. Push in until the ends of the two tubes are even.

☐ 3

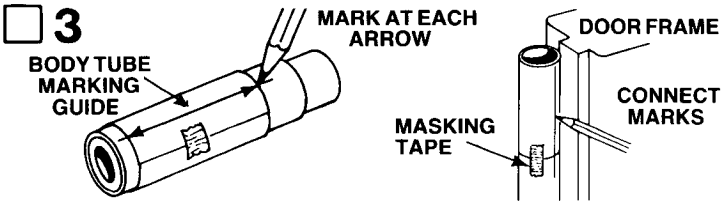

Cut out the body tube marking guide. Wrap the guide around the lower stage body (BT-50J body tube), align the guide marks, and tape the guide together. Mark the fin and launch lug lines onto the body tube at both ends of the tube. Slide the guide off the tube. Fit the rear of the upper stage onto the front of the lower stage. Tape the tubes together in two places, making sure the tape does not cover the fin or launch lug lines. Draw straight lines connecting each pair of marks. The inside edge of a door frame can be used as a guide as shown. Extend the lines the length of the lower stage and at least 3" up the upper stage.

☐ 4

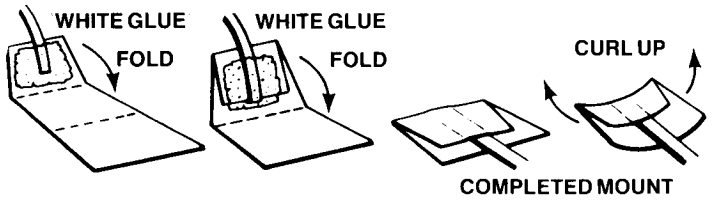

Cut out the shock cord mount from page 1 of this instruction sheet. Fold on the dotted lines, then unfold and apply glue to Section 1. Lay the end of the shock cord (part H) into the glue. Fold over and apply glue to the back of Section 1 and the exposed part of Section 2. Fold again to complete the mount. Curl the edges of the mount up so it will match the contour of the body tube and hold with your fingers until the glue sets.

☐ 5

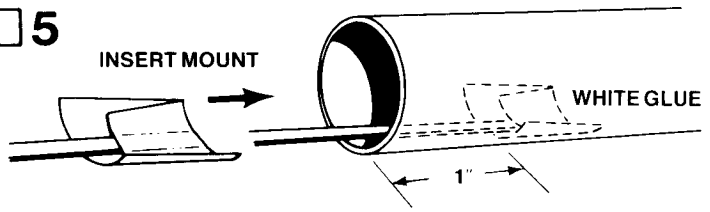

Use a finger or stick to apply glue to the inside of the front of the body tube, 1" to 2" from the front of the tube. Press the shock cord mount firmly into position in glue far enough from the front edge of the tube to allow clearance for the nose cone to fit into place. To insure a good bond use a stick or your finger to smear a film of glue over the mount and surrounding area in the body tube.

☐ 6

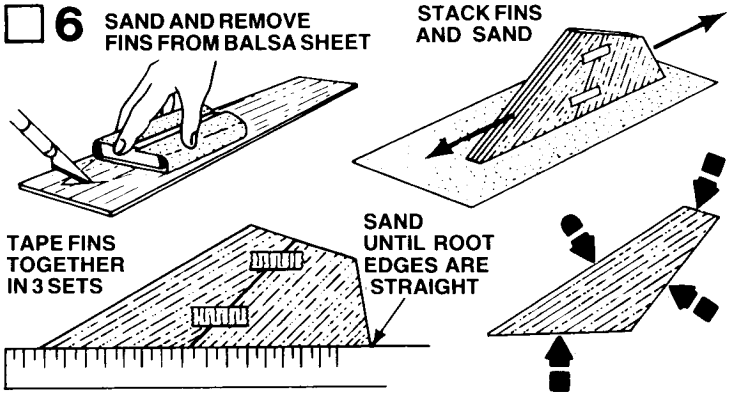

Fine-sand the die-cut balsa fin sheet (part I). Free the fin edges with a sharp knife, then carefully remove the die-cut fins from the sheet. Stack the fins into two sets and sand each set on all sides until they are smooth. Unstack the fins and tape them tightly together in three sets as shown. NOTE: The fins are NOT glued together. Use a ruler or similar straight-edge to be sure the root edges in each set are properly aligned with each other. Carefully sand the root edges if necessary to obtain the proper alignment. Sand the leading edge of each of the first fins in all of the three fin units round as shown. Leave the fin units taped together.

☐ 7

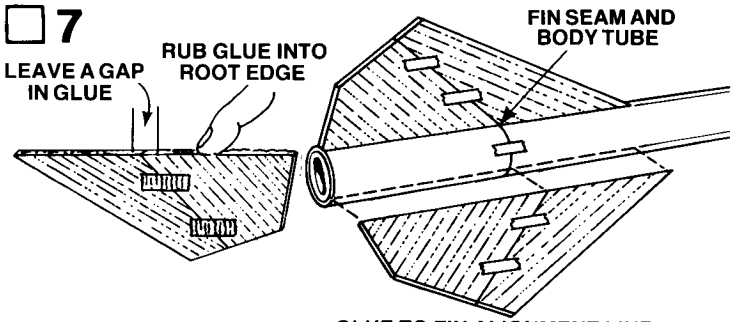

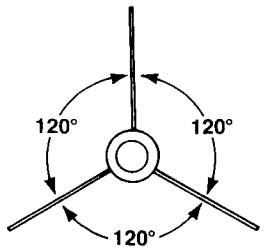

REAR VIEW

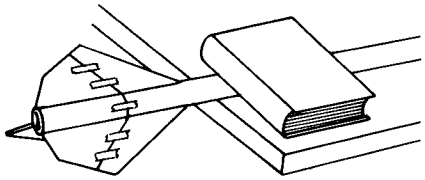

ALLOW FINS TO DRY

Being careful to leave a 1/8" gap on each side of the joint in each fin set, rub a line of glue into the root edge of each fin. Allow the glue to dry. Repeat the glue application technique to glue each of the fin units onto the body tube alignment lines, placing the fin seams over the joints of the body tube as shown. Adjust the fins so that they project straight away from the body tube. Again check to make sure that there is not any glue on the fin seams or the body tube joint and that the fins are aligned properly on the alignment lines. DO NOT set the rocket on its fins while the glue is wet.

☐ 8

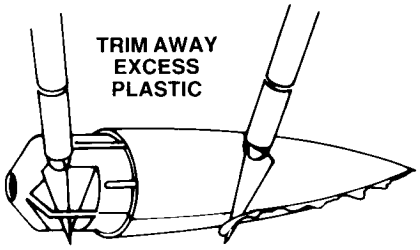

Trim or sand any excess plastic from around the sides of the nose cone (part J). Use a sharp knife to remove any excess plastic from the inside of the molded eyelet at the rear of the nose cone. Wash the nose cone with lukewarm soapy water, rinse well, and let dry.

☐ 9

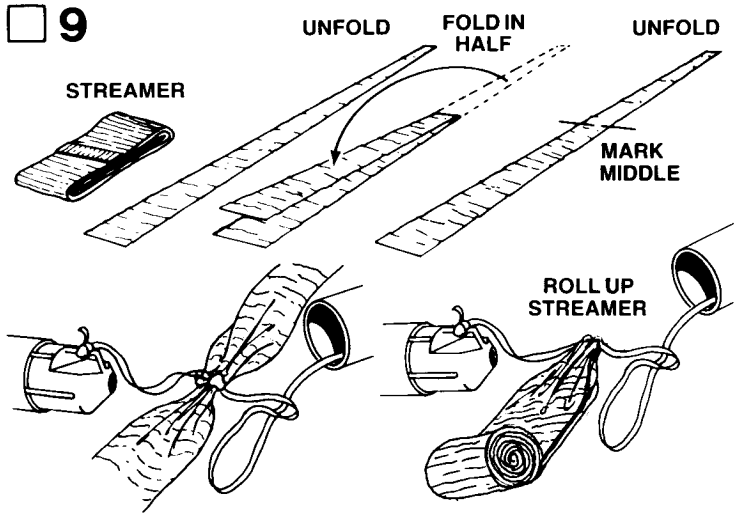

Unfold the streamer (part K) and refold lengthwise to find its center. The streamer should be tied to the shock cord about 6" from the end of the shock cord. Tie the end of the shock cord to the nose cone. Fold the streamer twice lengthwise and roll until it fits into the body tube. Place the remainder of the shock cord and the nose cone into the body tube.

☐ 10

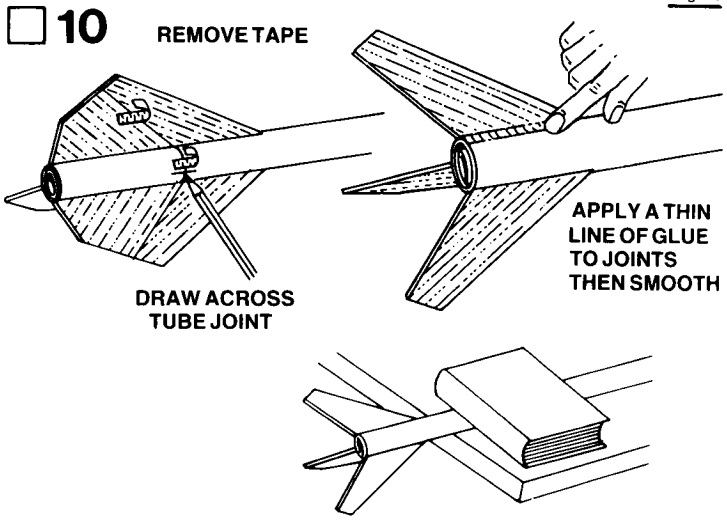

Proceed with this step ONLY after all of the glue has THOROUGHLY DRIED. Remove all of the tape from the fins and the body tube. Separate the upper and lower stages. Run a bead of glue along both sides of a fin. Draw your finger along the joint to smooth the glue and remove any excess. Repeat this with all of the fins. IMPORTANT — Support rocket on table edge as shown until the glue dries.

☐ 11

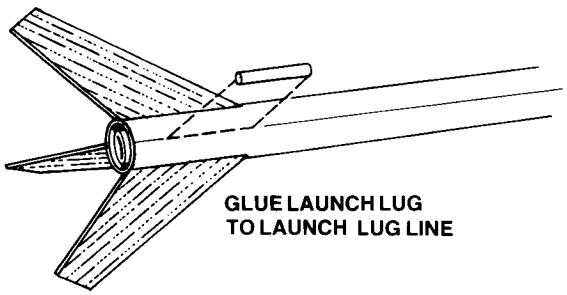

Glue the launch lug (part L) onto the launch lug line on the upper stage so that the front of the launch lug is even with the leading edge of the fins as shown. Sight along the launch lug to make sure that it runs parallel with the body tube. Apply a glue reinforcement to each side of the lug using a scrap of balsa for the applicator.

☐ 12

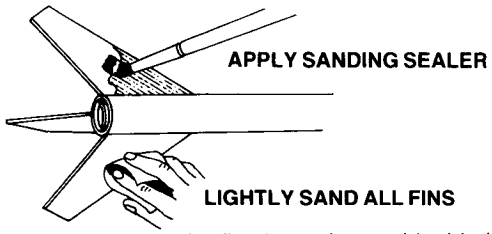

After the glue reinforcements on the fins have thoroughly dried, prepare the balsa surfaces for painting. Proper application of sanding sealer makes the rocket look better and fly higher. Apply a coat of sanding sealer to each fin. When the sealer is dry, lightly sand the fins. Repeat sealing and sanding until the balsa grain is filled and smooth.

PAINTING AND DETAILING

☐ 13

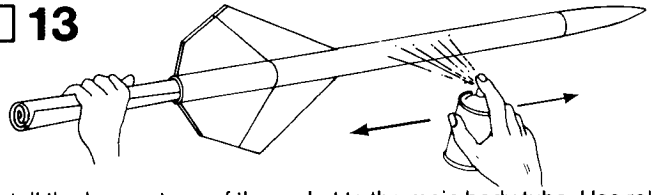

Install the lower stage of the rocket to the main body tube. Use rolled-up news paper or other paper inserted in the rear of the rocket for spraying. Spray the entire model with several light coats of gloss orange spray paint. Applying the paint in several light coats instead of one heavy coat will help to prevent runs and produce a better finish. Allow the paint to dry thoroughly (Overnight is best).

☐ 14

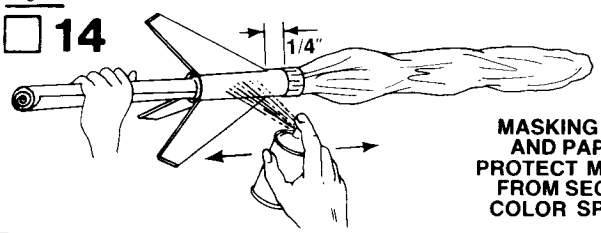

Remove lower stage. Using masking tape and paper, mask off the front of the main body tube approximately 1/4" in front of the fins as shown. Paint the rear of the rocket gloss black. Again, use light coats of spray paint to avoid runs and allow the paint to dry thoroughly before applying the decals.

☐ 15



Mask off the fins of the lower stage. Spray the body tube with one or two light coats of gloss black. After the paint has dried, remove all the masking tape.

DECAL PLACEMENT

☐ 16

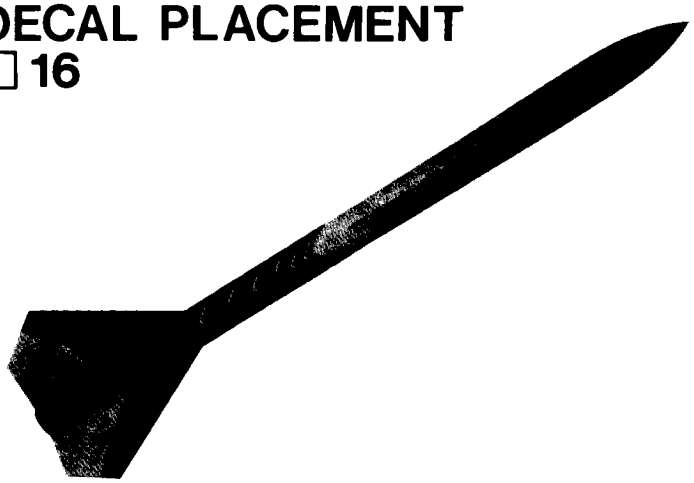

When all paint is dry, apply the decals (part M) in the positions shown. (A) Cut only one decal at a time from sheet. (B) Submerge decal in lukewarm water until decal slides on backing paper (usually 15 to 30 seconds). (C) Gently slide decal from backing paper onto model. (D) Move decal into exact position and carefully blot away excess water with a soft cloth. (E) If the decal "sticks" before you have it in position, apply water over the decal with a brush. This will permit the decal to be moved. (F) Smooth out all wrinkles and air bubbles before the decal dries. We recommend that the completed model be sprayed with Testor's "Gloss-Cote". This is a clear gloss spray that protects the decal and the model's finish.

LAUNCHING COMPONENTS

To launch your rocket you will need the following items:

—A model rocket launching system
—Flameproof recovery wadding
—A8-0, B6-0, C6-0 model rocket engines for the booster stage. And 1/2A6-4, A8-5, B4-6, B6-6, or C6-7 model rocket engines for the upper stage. Use an A8-0 and an 1/2A6-4 engine for your first flight.
—A8-3, B4-4, B8-5, C5-3, or C6-5 model rocket engines may be used when flying single stage rocket only.

Be sure to follow the HIAA-NAR* Model Rocket Safety Code when carrying out your model rocket activities.
*HIAA—Hobby Industry of America
*NAR—National Association of Rocketry

COUNTDOWN CHECKLIST

T-14

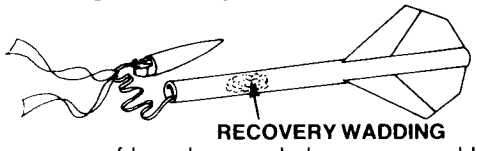

Pack 4 or 5 squares of loosely crumpled recovery wadding into the body tube. Usually this will fill the body tube for a distance equal to about 1-1/2 times its diameter.

T-13

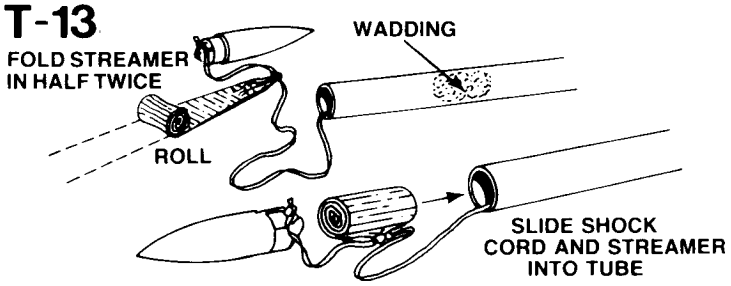

Fold the streamer in half lengthwise. Fold again, then roll streamer tightly until the streamer fits loosely into the rocket body. Pack the shock cord neatly into the rocket body. Slide nose cone into place.

T-12

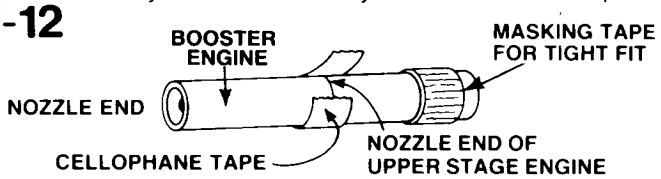

Position the engines with the nozzle of the upper stage engine against the top end of the booster engine. Wrap a layer of cellophane tape tightly around the joint as shown. Check to be sure the engines are in their proper relative positions. Wrap masking tape around the top of the upper stage engine so it makes a tight friction fit in the engine mount tube. Insert the upper stage end of the engine unit into the upper stage engine mount.

T-11

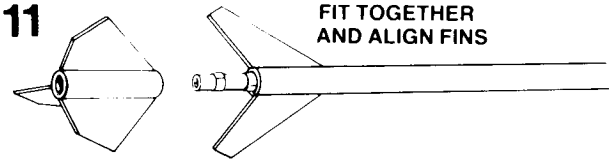

Wrap masking tape around the lower portion of the lower booster engine. Slide the lower stage onto the booster engine. Make sure you have enough masking tape around engine for a tight fit. Twist the lower stage to align the fins exactly.

T-10 Install an igniter in the booster engine as directed in the engine instructions.

T-9 Disarm the launch panel — REMOVE SAFETY KEY!

T-8 Use a piece of tape wrapped around the launch rod to support the rocket 2" above the blast deflector. Place rocket on launch pad, making sure rocket slides freely on launch rod. Clean the microclips and attach to the igniter.

T-7 Clear the launch area. Alert recovery crew and trackers. Check for low flying aircraft and unauthorized persons in the recovery area.

T-6 Arm the launch panel — INSERT SAFETY KEY!

-5-4-3-2-1-LAUNCH!!

MISFIRE PROCEDURE

Disarm the launch panel. Wait one minute before approaching the rocket on the launch pad. Remove the rocket, clean the igniter residue from the nozzle of the engine, and carefully install a new igniter. Repeat the Countdown Checklist.

Failure of the rocket engine to function properly is nearly always caused by a failure to install the igniter correctly. This failure permits the igniter to heat and burn into two pieces without igniting the engine.

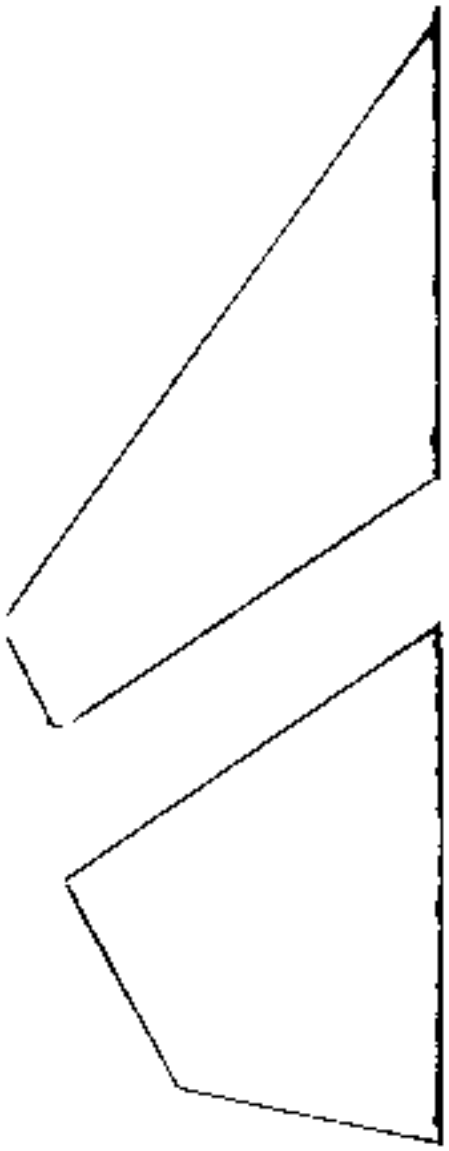


TIGERSTREAK
CENTURI ENG.
PART NO. 36875

TIGER STREAK

SKILL LEVEL 3

- High Altitude 2 Stage Performance
- Flights Over 2,500 Feet!
- Die Cut Balsa Fins
- Molded Plastic Nose Cone
- Bold Accent Decal
- Reliable Streamer Recovery



MODEL KIT
Parts are Glue not included
MODÈLE RÉDUIT
Pièces et Colle non comprises

Centuri

FLYING MODEL ROCKET

SPECIFICATIONS
Length: 18.25" (46.36 cm)
Dia: .076" (24.8 mm)
Weight: 1.34 oz. (38 g)

RECOMMENDED ENGINES

#5357