DEVELOPMENT OF THE PVC SPIDER

Meatball Rocketry Team
T-684

Report by Joshua T. Tschirhart
July 27, 2005

Copyright © 2005 Joshua T. Tschirhart
This report may be printed and/or copied for non-commercial use as long as this notice remains intact.

For more information on the PVC Spider and other projects, visit www.meatballrocketry.com

R&D Report from http://nar.org National Association of Rocketry

TABLE OF CONTENTS

Summary
Introduction
Materials & Cost
Origin of the Spider Concept
PVC Spider Basics
Static Tests
Flight Tests
Spider Damage/Design Modifications
Conclusion
Further Work
Appendix A: PVC Spider Diagrams (2 pages)
Appendix B: Pyrodex Burn Properties Testing Summary
Appendix C: PVC Spider Construction/Use Tips
Appendix D: PVC Spider Countdown Checklist
Appendix E: Project Photos
Appendix F: Early Spider Concepts

SUMMARY

Clustering of black powder motors has been attempted since the early days of model rocketry, but most of the traditional clustering methods have proven to be less than ideal. Anecdotal evidence from other rocketeers tends to show that the potential for human error and complexity of preparation work can make multiple-motor flying a daunting task. Clustering can be particularly harrowing for competitive scale modelers who not only risk crashing a model with hundreds of hours invested, but also risk losing a competition because they do not have enough time to prepare additional flights.

In order to create an inexpensive, safe, reliable, and simple clustering method for myself and other scale modelers, I developed the PVC Spider, which is derived from the spider clustering method used by some Eastern European teams in international (FAI) rocketry competition. The Spider works using a single Estes igniter to initiate a charge of Pyrodex powder, forcing flaming particles through appropriately-spaced metal tubing to simultaneously ignite all motors. Three different cluster configurations were flight tested over the course of nine flights, resulting in the successful ignition of all 74 motors used. *NOTE: The PVC Spider device does NOT use regular black powder, but only Pyrodex RS. Direct replacement of this using equal volume of black powder could be very dangerous. At this time, no other types of pyrotechnic powders have been tested with the Spider.*

From the current flight test results and in light of known difficulties encountered with traditional methods, we can conclude that the PVC Spider clustering method has much to offer in terms of reliability and safety. The method has proven itself to be inexpensive, reliable, reusable, as well as safe, if used in accordance with the guidelines outlined in this report.

INTRODUCTION

Since the beginning of the model rocketry hobby, successful clustering of motors has been achieved using only a few select methods. The most popular method employs Estes igniters, wired in parallel. Other popular ignition methods use disposable photo flashbulbs with Thermalite fuse (developed by

R&D Report from http://nar.org National Association of Rocketry

John Langford) or even low-current electric matches. The most unusual method is called "flash-pan" or "flash-in-the-pan" ignition and employs an open flat container, holding a moderate amount of black powder which is ignited by a single electrical igniter. All of these techniques have certain drawbacks limiting their practicality for reliably igniting clusters due to issues of complexity, availability of materials, prep-time constraints, as well as safety.

In 2003 I began designing and building a large and complex Saturn I scale model to fly on a cluster of eight 18mm "C" motors. The hope of creating a worry-free ignition method led me to develop the PVC Spider device. My objective was to design and test a reusable, simple, safe, yet highly reliable way to cluster black powder motors, requiring as little prep-time as possible, and using relatively inexpensive and widely available materials. Therefore, the PVC Spider is designed with scale modelers in mind since we often have more time and energy invested in our rockets than do average sport fliers. Scale competitors, especially those at the international level (FAI), may also need to make more than one flight in a relatively short time period. This may not be possible if one is dependent upon traditional clustering methods and the time-consuming procedures necessary to maximize their reliability.

The purpose of this report is to detail the design and use of the PVC Spider device, demonstrating its reliability and safety as revealed by static and flight testing, and to evaluate the Spider's potential usefulness in light of traditional clustering difficulties and the complexity of the popular clustering methods. This report assumes that the reader is at least somewhat familiar with these well-known traditional techniques and the sort of prep work that is routinely necessary to successfully implement them.

MATERIALS & COST

Several of the materials used for PVC Spider construction and testing were either donated (e.g. several Estes motors) or taken from an existing supply of materials at home (e.g. rocket body parts and PVC pipe). Recording an accurate figure of the actual financial cost of this project was not feasible; however, I will try to approximate the cost of developing the device as realistically as possible. This list excludes the cost of the rockets used in testing, as well as the cost of the launch system components, unless those launcher components are used exclusively for Spider testing. Donated or "on-hand" materials are labeled "N/A." Total cost of these materials is approximately $253.00.

N/A	2" PVC Pipe (O.D. 2.38 in, 10 ft long)
N/A	1 1/4" PVC Pipe (O.D. 1.66 in, 10 ft long) [used in Spider #1]
$12.00	1/4" and 3/16" Aircraft Plywood (2 sheets)
$14.91	Laser-cut Lite Ply components from Balsa Machining Service
N/A	Pyrodex P (small container donated by Dave Muesing)
N/A	Pyrodex RS (full container donated by Pete Covell)
$10.00	Pyrodex RS (bought by teammate Kevin Johnson)
N/A	2-Part Epoxy (Ace Hardware brand)
N/A	Apogee "Fix-It" Epoxy Clay
$5.00	Spider mounting bracket/hardware
$5.00	Stainless steel screws & wing nuts
$20.00	Brass Lamp Hardware [used in Spider #1 only for L-shaped "legs"]
$19.50	K&S Stainless Steel Tubes (from McMaster-Carr)
$10.00	K&S Brass Tubes (5/32", 3/16", & 1/8")
$15.00	Machine Shop cost (to cut steel tubes)

R&D Report from http://nar.org National Association of Rocketry

$35.00	A10-3T or A10-PT motors (7 packs)
$35.00	C6-0 motors (5 packs)
$6.00	C6-0 motors (2 packs bought at discount)
N/A	C6-0 motors (2 packs donated by Pete Covell)
$21.00	C6-5 motors (3 packs)
$8.00	C11-0 motors (1 pack)
$16.00	D12-3 motors (2 packs)
$14.00	B6-0 motors (2 packs)
$7.00	B6-4 motors (1 pack)
N/A	BT-50 (for Pyrodex “cup”)
N/A	Thick CA
N/A	Thin CA
N/A	CA Accelerator

ORIGIN OF THE SPIDER CONCEPT

Spider ignition is not a new concept. My own PVC Spider design is nominally based on the spider ignition method used by Russians when flying Soyuz scale models in FAI competition. In an article from the November/December 1990 issue of *American Spacemodeling*, former gold-medalist Bob Biedron states that the Russian spider has a central chamber containing a charge of black powder, from which metal tubes lead to each motor nozzle in the cluster. The powder is electrically ignited and the resulting hot gases are directed into the motor nozzles via the metal tubes, resulting in simultaneous ignition of all the motors. Photos of the devices seem to indicate that they are made of precision-machined metal. Custom machining of such a device is too cost-prohibitive for most "small-time" modelers, including myself. Therefore, I had to find alternative solutions and materials. I also did not have any access to detailed documentation regarding past FAI spider designs, so I needed to create my own design from scratch.

R&D WORK BY JOHN PURSLEY

Several months after initiating experiments with my own design, I exchanged a few emails with fellow scale modeler John Pursley regarding some of his own clustering experimentation using “single-use” spiders. Unlike the all-metal spiders seen in FAI competition, his design consists of a 13mm motor with no delay or ejection charge, capped off with a resin plug that accommodates a number of brass tubes spaced in accordance with a given motor arrangement. He reported 100% ignition success for all of his own tests. I did not learn of John’s work until long into my own project, so his design has had no direct effect on my own.

PVC SPIDER BASICS

The PVC Spider is a re-inventing of the FAI spider design using inexpensive, readily available parts in construction, including schedule 40 PVC pipe, plywood, small diameter metal tubing, and standard fastener hardware. The device is reusable, fairly durable, and is simple enough to redesign for a number of different motor configurations. Only minor changes in the basic design have been made between the initial flight-tested 8-motor spider and the final 13-motor version. See Appendix A for complete diagrams of the 8-motor spider design. Actual construction of such a device takes between one and two hours.

PYRODEX AS EXTENSION OF IGNITER PYROGEN

Aside from materials, my other main deviation from the Russian design is the employment of Pyrodex RS as an ignition fuel instead of black powder. Although my original thought was to utilize traditional black powder, several sources have suggested that black powder is becoming more difficult to purchase due to certain regulatory issues and concerns. Pyrodex, on the other hand, is relatively easy to obtain and can even be found at stores such as Wal-Mart. Although it is sold as a direct replacement for black powder in guns, when unconfined Pyrodex burns more slowly than conventional black powder and is generally safer when used as such. Nevertheless, in the midst of designing my PVC Spider I still did not know how useful (or dangerous) Pyrodex would be if ignited within a spider device. I had also not determined how the powder would be situated within the device.

PYRODEX BURN CHARACTERISTICS

In July of 2003 I performed seven tests to help evaluate the burn characteristics of Pyrodex. All but one test was done with both Pyrodex P and Pyrodex RS (see Appendix B for specific results of each test). I determined that if Pyrodex is tightly confined it will burn quite rapidly (explosively) and does not produce much flame which is necessary for motor ignition. It will, however, produce a bright "flare-up" if ignited unconfined in the open air. Therefore, I modified my PVC Spider design to include a powder-holding "cup" (see Appendix A) that is open to the air inside the device so that the Pyrodex charge can flare-up properly once ignited. The modification also maintained plenty of space between the cup and the exhaust tube mounting plate (approximately 2 cubic inches) to prevent over-confinement of the powder. The fixed size of the cup also limits the amount of Pyrodex that can be installed, thus providing an added safety factor.

STATIC TESTS

Before testing a complete PVC Spider device I first needed to see how Pyrodex would burn when installed in the powder cup. I tested the spider bottom plate assembly by itself (without the upper PVC/tubing assembly) so as to view the burn characteristics. I used a standard home-made launch system (from about 30 feet away) to initiate this and all subsequent static tests prior to the first launch test. The tests were all performed at dusk or in the dark. Ignition of the powder in the cup resulted in [what seemed to me] an adequate amount of flame produced.

I then proceeded to test the device in its assembled form while ducking behind a car in case the Spider might rupture. Video footage of my first tests of Spider #1 shows that the flaming Pyrodex particles shoot upward rather quickly, producing an immediate and brief "whoosh" sound. These first two tests settled my concerns about rupturing the device. One more static firing was performed with a newly designed Spider device (Spider #2) prior to the first flight test, with the same promising results.

Although the flame produced during the static tests had the appearance of being adequate for ignition of multiple motors, I did not know if the flaming particles would actually be hot enough for ignition. Since I do not have any way of measuring temperature of the spider exhaust, I was able to put together a crude system on a rail launcher that would allow a test airframe and motor to "lift-off" from the spider device but not leave the rail. By allowing the airframe to move freely, the motor would not be forcibly held over the Spider exhaust for a time longer than would occur in a true launch situation. I performed a single test using an old out-of-production 1/2A6-0 motor sitting just above a single tube

R&D Report from http://nar.org National Association of Rocketry

from Spider #1. The test showed that the flame from the Pyrodex is hot enough to ignite the propellant of an Estes motor. Ignition occurred so quickly that I decided not do any further tests of this kind.

DAYTIME STATIC TESTING

On two occasions (starting with Spider #3) I performed a daytime static test of the PVC Spider device. Both tests produced a visible smoke-like exhaust from the spider tubing, as opposed to the bright flare-up visible during nighttime tests.

FLIGHT TESTS

Live ignition testing of the PVC Spider device was accomplished between September of 2003 and July of 2005. A total of nine cluster flights were completed with 100% ignition of all 74 motors involved. Five flights involved an 8-motor cluster; two flights involved a 4-motor cluster; and the two final flights successfully employed a 13-motor cluster in each. A total of four PVC Spider devices were used (Spiders #2 through #5). All flight tests used Pyrodex RS as ignition fuel. The Saturn I scale test model (or variation thereof) was used for tests 1 through 5, as well as test 7. Kevin Johnson's modified Exocet missile model was used for test 6. A scratch-built "Calamity Jane" sport model was flown in the final two tests. Note also that in all of the flights, none of the models' aft sections incurred any visible damage from the upward exhaust of the ignited Pyrodex.

TEST #	DATE	PVC SPIDER #	MOTOR TYPES USED	PERCENT OF MOTORS IGNITED (%)	COMMENTS
1	9-14-03	#2	(2) C6-5, (6) C6-0	100	Permanent brass tube version utilized. All brass tubes but one show signs of severe melting from motor exhaust.
2	10-12-03	#3	(2) C6-5, (6) C6-0	100	Permanent stainless steel tube version introduced. Two tubes show signs of 'slight' melting post-flight.
3	12-7-03	#3	(2) C6-5, (6) C6-0	100	Further 'slight' melting on several steel tubes
4	2-7-04	#3	(2) C6-5, (6) C6-0	100	Continued 'slight' melting of several steel tubes
5	6-20-04	#4	(2) C11-0, (2) D12-3	100	Introduction of first removable-brass tube version. Tubes show severe melting post-flight; tubes easily replaced.
6	9-11-04	#3	(2) B6-4, (6) B6-0	100	Only flight prepared by Kevin Johnson -- No significant tube melting recorded
7	6-19-05	#4	(2) C6-0, (2) D12-5	100	Second test with removable brass tubes (same results as Test #5)

R&D Report from http://nar.org National Association of Rocketry

8	7-16-05	#5	(3) A10-3T, (10) A10-PT	100	Final design using removable brass tubing. Four tubes came out of their mounts at launch due to inadequate anchoring with tape—all but one was retrieved. All tubes showed no signs of melting and can be reused.
9	7-17-05	#5	(3) A10-3T, (10) A10-PT	100	No tubes were lost at launch (probably due to better use of masking tape). Very little melting visible on one or two tubes —all can be reused.

SPIDER DAMAGE/DESIGN MODIFICATIONS

After the initial flight test, it was determined that some changes needed to be made in the PVC Spider design. The first spider (#2) employed for launch used permanently affixed K&S brass tubes to direct the Pyrodex flame. The thin brass proved to be too soft for the subsequent motor exhaust heat and thrust as all but one tube showed signs of severe melting, making the device non-reusable. The resulting modification (seen in Spider #3) is the implementation of K&S stainless steel tubing (available from McMaster-Carr Supply Co.). Although it is much tougher than the thinner-walled brass, the tips of the steel tubes still melt and contort under the force of the motor exhaust; however, the melting is nominal and will probably not pose an ignition problem for several flights. Nevertheless, steel is much more difficult to work with and may require professional services to cut parts cleanly (I paid $15.00 for a local machine shop to cut tubes for just one spider).

To balance cost, time, and reusability, I determined that a logical compromise would be to incorporate removable brass tubes that can be replaced as needed after every flight. The soft brass is easy to cut with a K&S cutter and can be prepared en masse for on-the-field replacement; severe melting is no longer an issue. The removable-tube modification occurred first in Spider #4. The primary drawback is that the extensions must be taped in place or some of them might get "blown-out" at launch if not held in position (this happened on only one out of four flights using removable tubes). Although melting of the brass tubing was significant in all 8-motor flights and the two 4-motor flights, the final two launches using a 13-motor cluster of 13mm Estes motors caused little or no melting of the tubes. Apparently individual motor thrust, as well as the rate of acceleration due to overall thrust and rocket weight, will determine how often the removable tubes will have to be replaced, if at all.

Aside from the brass tube melting problem, the only other significant damage incurred from the motor blast is internal. Depending on the cluster arrangement and slowness of liftoff, the powder cup itself may need to be reinforced or rebuilt after only a few flights, as it is merely a short section of BT-50 reinforced with either thick CA or epoxy clay. Future Spider work may involve strengthening the powder cup to minimize damage, but no changes have been made to the current design as the entire bottom plate assembly (including the cup) can be easily rebuilt if necessary.

CONCLUSION

It would be ideal to have a much wider scope of data from which to draw conclusions in a more scientific fashion, but time and budget constraints are serious hindrances to comprehensive flight testing with such a large number of motors. Nevertheless, given the absolute simplicity with which the Spider operates and the consistent test results that have been obtained thus far, we can conclude that the

R&D Report from http://nar.org National Association of Rocketry

PVC Spider has great potential for continued success in igniting large clusters of black powder motors in a safe and efficient manner.

Certain "common sense" assumptions will help us compare the usefulness and safety of the PVC Spider with the traditional clustering methods. Anecdotal evidence from other rocketeers using these methods, as well as personal experience, tends to support these general principles. Even those who have perfected their clustering techniques can refer to certain instances of ignition failure that they attribute to human error, whether because of hurried prep work, skipped steps from a mental "checklist", or even an inadvertent electrical short (e.g. touching microclips within a set of clip whips). The assumptions are as follows:

1) Reliability is an essential component of safety (in clustering methods).
2) An increase in complexity of an electrical system (in this case, several igniters usually wired together in parallel) increases the probability of failure at one or more points, thus reducing reliability of the system.
3) Increasing the number of preparation procedures and the length of time needed for preparation (e.g. continuity or resistance testing of individual parts, insulating parts with tape, etc.) affords an increased opportunity for human error, thus reducing reliability of the given system.
4) If the majority of preparation work is done immediately prior to launch, likelihood of human error increases, thus reducing reliability of the clustering method. This is especially true when such prep work is accomplished in the heat of competition when distractions are prevalent and time may be limited. In fact, eliminating distractions is impossible at any launch involving multiple rocketeers, as safety demands that everyone pay attention to what is happening around them. If most preparations can be completed in the workshop there is much more time for a modeler to check and double check for errors.

In light of these assumptions we can also conclude that a properly implemented PVC Spider is theoretically superior to the traditional clustering methods in terms of reliability, and thus in terms of safety (assumption 1). The Spider method reduces the potential for both system failure and human error in accordance with the remaining three assumptions. The Spider has fewer electrical components and connections (assumption 2), it reduces the number of steps needed to properly prepare for launch (assumption 3), and it takes relatively little time to prep on the launch field (assumption 4), thus reducing the potential for error due to distractions.

Note also that the nature of preparation involved is such that human error might not interfere with the reliability of the system. If one major component is eliminated (or forgotten) due to human error, the PVC Spider will not function at all. If the igniter fails to work, then the Pyrodex will not ignite. If one forgets to install the Pyrodex, ignition of the motors will not occur. No traditional method can boast of such simplicity. Even the crudest method (flash-pan) usually involves multiple pieces of Thermalite fuse in its system; each length of fuse is a possible point of failure that the modeler *hopes* to function as expected. Thus the PVC Spider appears to be the safest method that currently exists for clustering black powder motors, both in terms of complexity as well as in demonstrated reliability.

PERSONAL OPINIONS/CONCERNS

I feel that since rocketry techniques tend to be a very personal matter, it would be appropriate to voice my own thoughts. First, I do not think the spider method is necessarily for everyone. Some people may really enjoy the prep work that comes from wiring together clip whips and do not mind testing

continuity or resistance of igniters—in the same way that some rocketeers would rather sand and seal balsa rather than glue on a plastic fin unit. Personally, I sincerely dislike having to do any more wiring or soldering than necessary, so the PVC Spider is just right for someone like me. Also, the PVC Spider may not the most efficient method for someone doing very small clusters (less than four). I am sure it can be done, but in many instances a Spider device may be less than ideal.

Above all, I do not at all recommend anyone using regular black powder with the Spider. Using it as a direct volume replacement is possibly very dangerous! If black powder works at all in this design, then it would be in a significantly lesser amount. I have no idea what that amount would be, and considering how efficiently Pyrodex works in this application, I simply do not see any reason to try the black powder. However, if someone insists on doing such experimentation, please approach any testing with great caution, and do not do testing of that sort in front of any other people.

FURTHER WORK

There are many things that can be done to further explore the use of the PVC Spider. It would be good to see some more flight testing to facilitate better statistical analysis; although I have no doubt that any further tests would be successful. Testing of different size PVC pipe for use in Spider bodies should also be done. Also, since only Pyrodex RS was used in the flight tests for this project, Pyrodex P should be tested for its usability, though I think that it should work just as well as the RS. Sideways mounted "L" legs for igniting "outboard" motor clusters in Saturn I or IB scale models is another possibility for future designs and testing (my very first Spider prototype was just such a design, but it was never tested in flight conditions).



APPENDIX A (PAGE 1 OF 2)

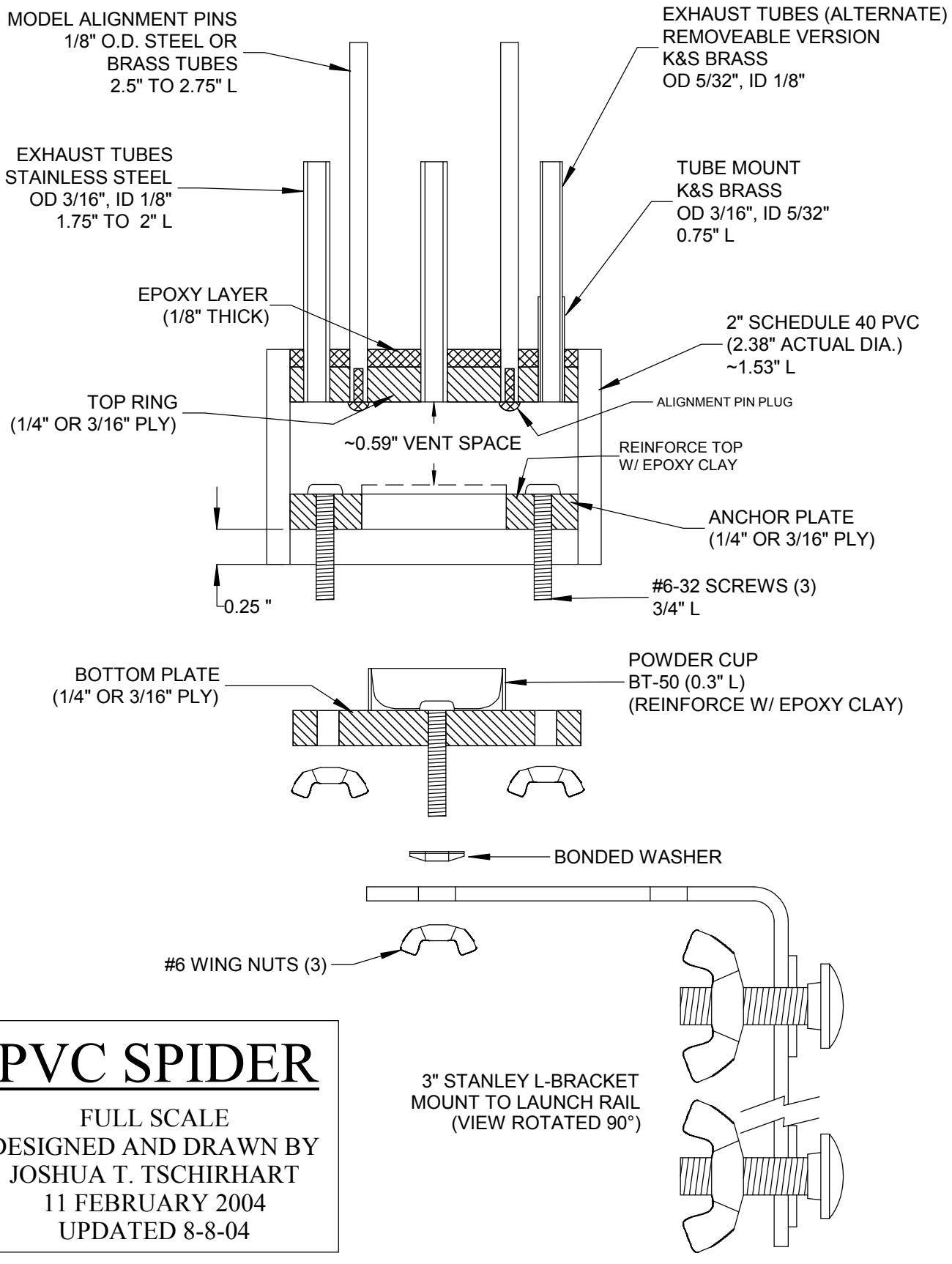

PVC SPIDER

FULL SCALE
DESIGNED AND DRAWN BY
JOSHUA T. TSCHIRHART
11 FEBRUARY 2004
UPDATED 8-8-04

APPENDIX A (PAGE 2 OF 2)

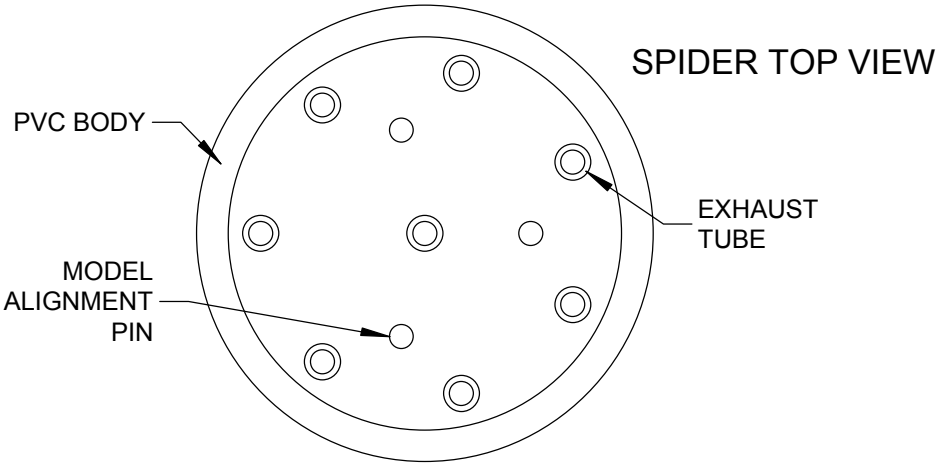

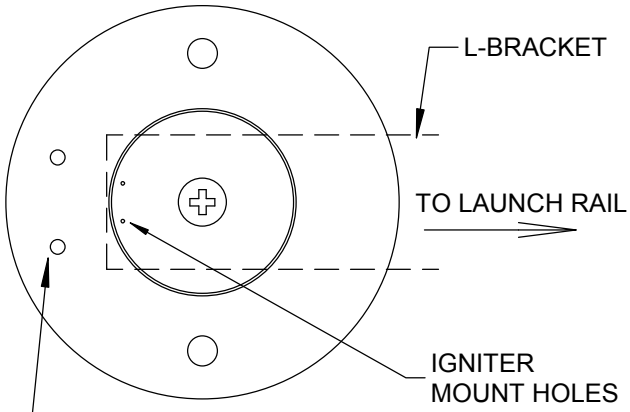

BOTTOM PLATE
W/ POWDER CUP
(TOP VIEW)

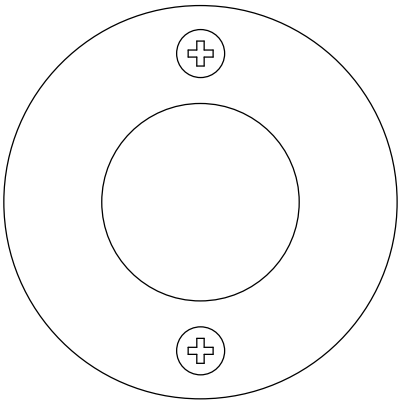

ANCHOR PLATE
(TOP VIEW)

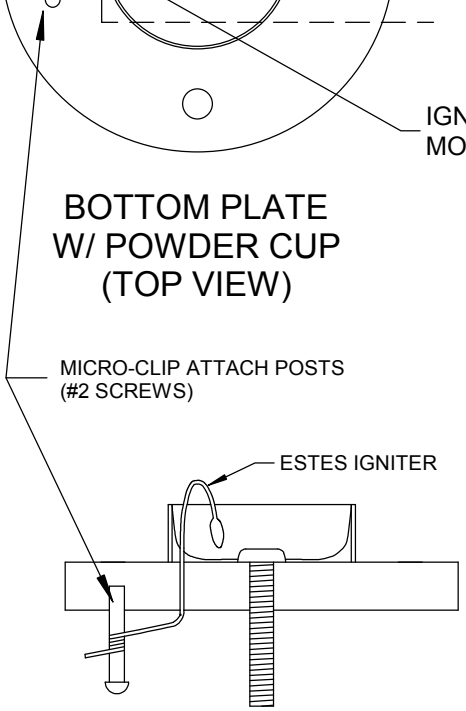

BOTTOM PLATE
(IGNITER MOUNT DETAIL)

PVC SPIDER DETAILS

FULL SCALE
DRAWN BY
JOSHUA T. TSCHIRHART
11 FEBRUARY 2004
UPDATED 4-14-04

APPENDIX B

PYRODEX BURN PROPERTIES TESTING SUMMARY
JULY 27, 2003

NOTE: All but one type of test was done with both Pyrodex P and Pyrodex RS.

TEST 1 (RS) and TEST 2 (P): Scotch Magic Tape was dipped in Pyrodex container and wrapped loosely around and Estes igniter. This produced an approximately 2" flare-up with both Pyrodex P and RS.

TEST 3 (RS) and TEST 6 (P): Masking tape was wrapped around the igniter pyrogen forming a "cone" shape. Pyrodex was poured into the cone with Magic tape covering the opening. Test 3 produced a "pop" sound with no noticeable flame. Test 6 appeared the same as Test 3 but with less noise.

TEST 4 (RS) and TEST 5 (P): Same test as Tests 3 and 6 but without the Magic tape covering the cone opening. Ignition resulted in a brief flare-out (about 2-3") from the tape cone in both tests.

TEST 7 (RS): A piece of masking tape was formed into a 3 inch diameter circle dipped into the RS container. An Estes igniter was taped at one point. Ignition resulted in a flare-up about 2-3" that burns around the circle of tape in about 3-4 seconds. The masking tape continued to smolder and had to be extinguished.

APPENDIX C

PVC SPIDER CONSTRUCTION/USE TIPS

INTERNAL RINGS/BULKHEADS

The internal Spider rings can be made from regular aircraft ply or even lite ply. I chose lite ply for my latest spiders simply because Balsa Machining Service did not have 3/16" ply on their materials list. So far 1/4" lite ply seems to work fine.

INTERNAL REINFORCEMENT

The internal spider parts get a lot of abuse from rocket exhaust during lift-off. I would recommend coating the inside of the Powder Cup, as well as the top of the Anchor Plate with Some sort of epoxy clay. You may even want to coat the underside of the Top Ring; just don't clog the Exhaust Tubes! I also recommend sealing all edges of all the plywood rings with thin CA (super glue).

DON'T SPILL THE PYRODEX!

Unless you want to make things difficult for yourself, follow my example and make the Bottom Plate/Cup Assembly able to mount to the launch pad BEFORE you dispense the Pyrodex. That way you don't have a chance to make a mess of things.

PLUG THE ALIGNMENT PINS

Model Alignment Pins (1/8" O.D.) are easy to plug (from the inside) with tiny #2 screws CA'd in place. You can find a bunch of little screws and nuts at Radio Shack or at online stores such as www.microfasteners.com.

USE A REMOVABLE MOTOR MOUNT IF POSSIBLE

If you want to change motor configurations or test-fit the Spider's model alignment pins, a removable motor mount is easiest way to go. This may not be necessary on smaller models.

BLAST DEFLECTOR?

The epoxy layer that holds the Exhaust Tubes in place serves as an adequate blast deflector of sorts. Since most of the flame is either directed to the inside of the spider or off the tops of the metal tubes, there is relatively little damage done to the top of the Spider body. If so desired, a simple deflector can be made from 26-gauge ductwork steel with holes punched to fit around the Exhaust Tubes, but this is not necessary--I have used such a deflector for only one spider test to date.

Although I have not done this myself, it probably would not hurt to install a wide blast deflector below the spider device—if your launcher has room. If you do not use a large deflector, I would suggest that you keep the spider/rocket at least 2-3 feet up from the ground to keep any stray motor exhaust away from the grass as much as possible.

APPENDIX D

PVC SPIDER COUNTDOWN CHECKLIST (TYPICAL)

1. Insert and tape removable brass tubes into their mounts on the Spider body.
2. Prep the rocket recovery system and motor mount.
3. Prep the motor nozzles (I lightly scratch the propellant with a scribing tool to make sure there is no excess nozzle clay).
4. Test fit spider alignment pins into motor mount. Sand and/or use baby powder for a smooth fit.
5. Insert cluster mount into rocket body and secure in place.
6. Attach L-bracket mount to launch rail.
7. Bend Igniter (see Appendix A) and insert into Spider Powder Cup/Bottom Plate. Wrap igniter lead wires around the microclip attachment posts. Use masking tape to insulate the igniter from L-bracket.
8. Attach Bottom Plate to L-bracket using washer & wingnut (see Appendix A).
9. Dispense Pyrodex into Powder Cup (approx. 2/3 to 3/4 full).
10. Slide Spider body onto Bottom Plate and anchor using wingnuts.
11. Slide rocket model with motors onto launch rail and down onto spider alignment pins until there is about 1/32" to 1/16" gap between motor nozzles and Spider Exhaust Tubes. You probably need some sort of "standoff" to hold the model in place.
12. Attach micro clips to igniter leads.
13. Countdown and launch.
14. Clean motor gunk buildup from inside the spider exhaust tubes before flying again. If you use the Spider more than once in one day, visually inspect the inside of the spider and tubes to be sure than motor "gunk" is not blocking the holes. It may help to keep an old toothbrush and some pipe cleaners available.
15. Tape new brass tubes (or re-tape old tubes if they are usable) in place before flying again. Even if old tubes are in good shape, they will have to be re-taped (tape usually burns off).
16. Use white vinegar to clean the spider after flying day. Rinse with water and let dry.

APPENDIX E

PROJECT PHOTOS





LEFT: Bob Biedron, Pete Covell, and Scott Brown eagerly assist me in prepping the first PVC Spider for flight test.

RIGHT: The Saturn I test model takes off under power of 8 C6 motors (both photos by Bruce Sexton).



LEFT: Stainless Steel Spider prior to flight test. Note the blast deflector at base of tubes (used one flight only).

RIGHT: Tail end of Saturn motor cluster after 4th test flight. There appears to be some motor residue from blast deflection of the motor exhaust, but no damage from the Spider.



LEFT: Stainless Steel Spider mounted to launch rail.

RIGHT: Tail end of "Calamity Jane" sport model after second flight. Note the lack of any burn damage to the model.



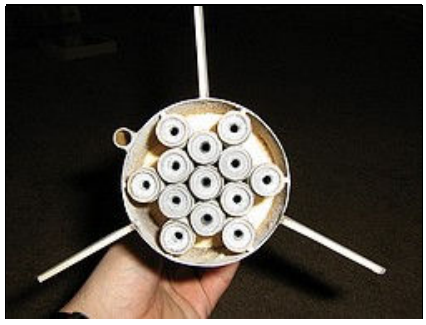

APPENDIX F

ALTERNATE EARLY SPIDER DESIGNS

These two alternate designs were attempts to closely mimic photos of a Russian design made for igniting the outer booster motors of a Soyuz model. It is not certain if the flaming particles would be able to travel through the extensions to reliably ignite outboard cluster motors.

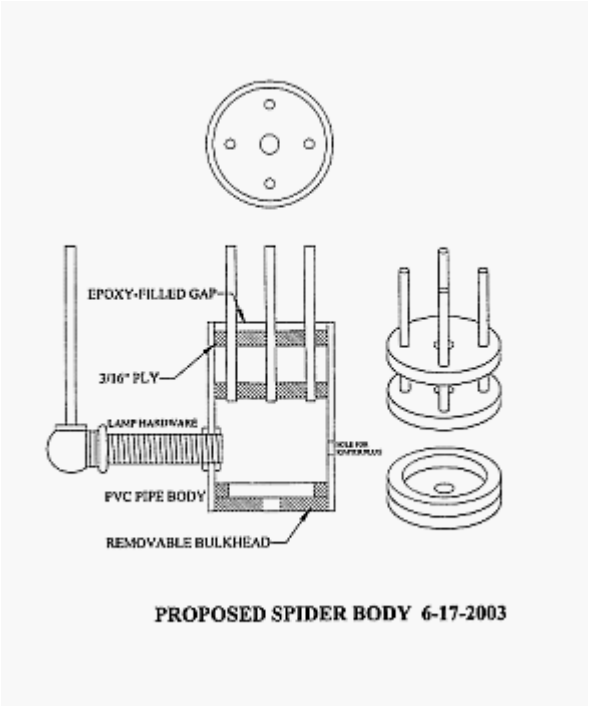

PROPOSED SPIDER BODY 6-17-2003

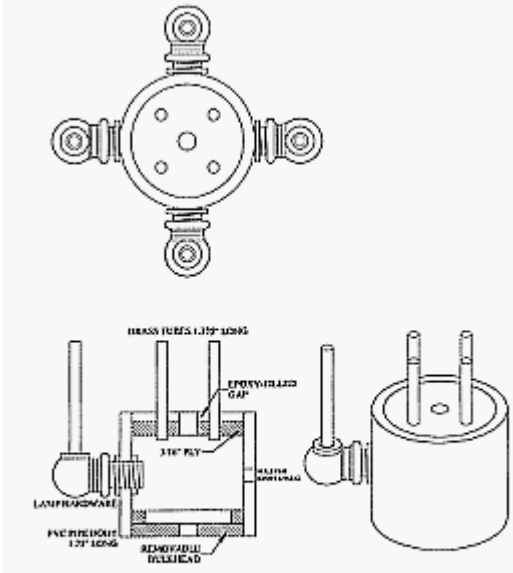

PROPOSED SPIDER BODY 7-5-2003

This R&D Report provided as a membership bonus for joining the National Association of Rocketry at http://nar.org

Check out the other membership bonuses at http://nar.org/members/

Thank you for joining the National Association of Rocketry!