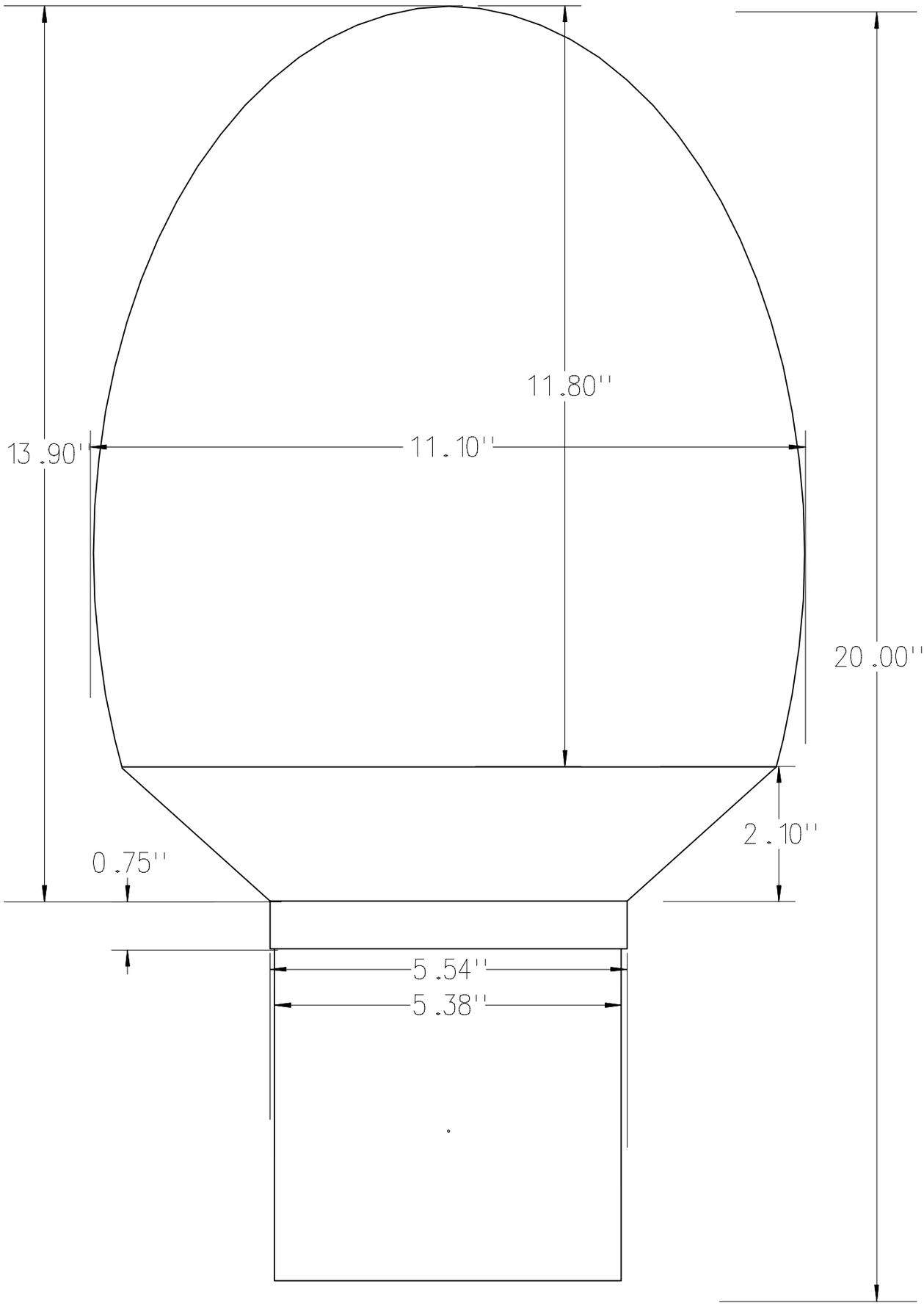

ROACHWERKS CUSTOMMACHINING	NOSECONE
DRAWING TITLE: EXPLORER AQUARIUS	
DRAWN BY: GORDON AGNELLO	
© Copyright Roachwerks Custom Machining	
DATE: 4/30/08 / SCALE: 1:2 / UNITS: INCHES / SHEET: 1/2	