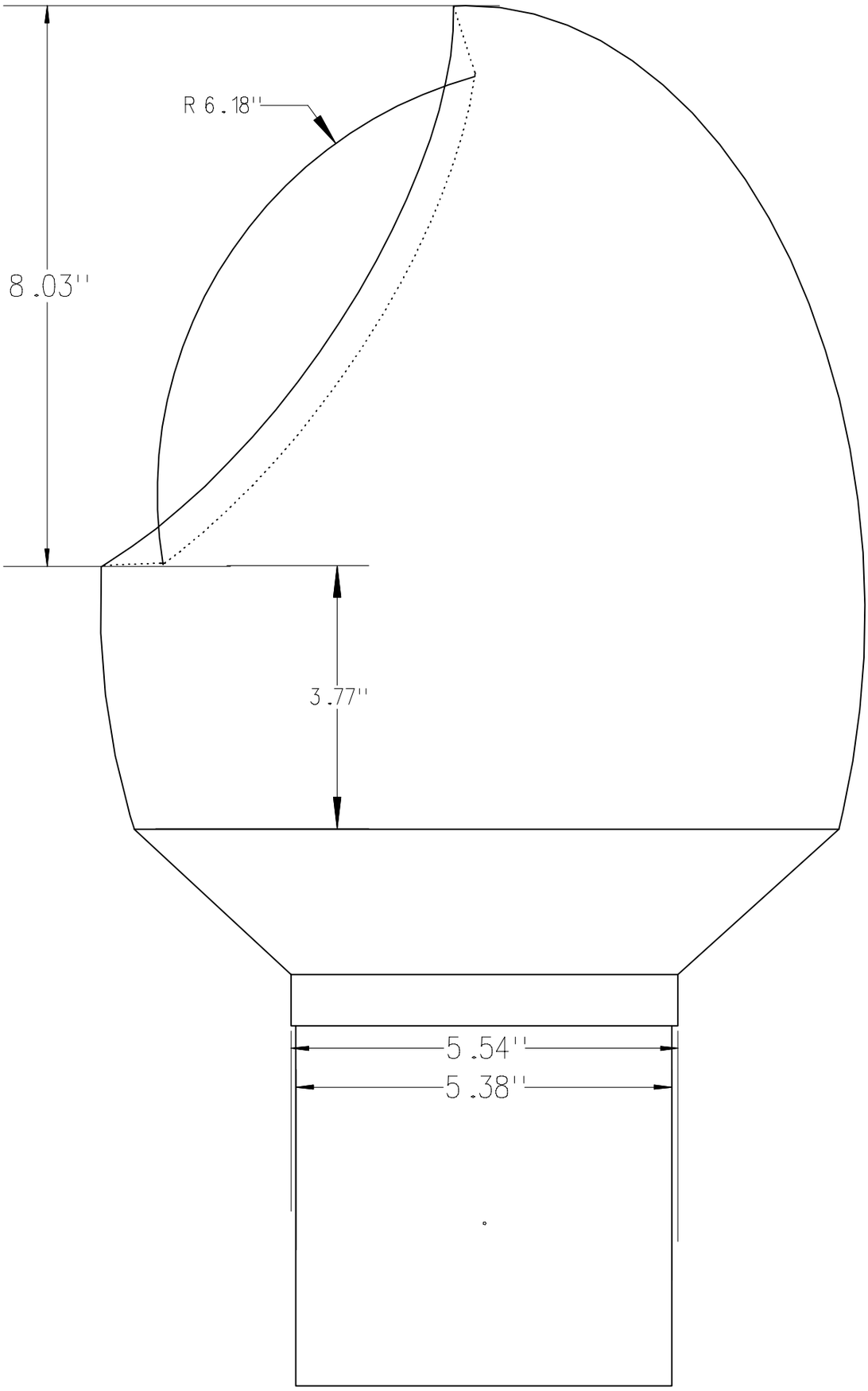

ROACHWERKS CUSTOMMACHINING	NOSECONE		
DRAWING TITLE: EXPLORER AQUARIUS			
DRAWN BY: GORDON AGNELLO			
© Copyright Roachwerks Custom Machining			
DATE: 4/30/08	SCALE: 1:2	UNITS: INCHES	SHEET: 2/2