An **"Odd-Ball"** Flying Model Rocket

BIRDIE

FeatherWeight Recovery

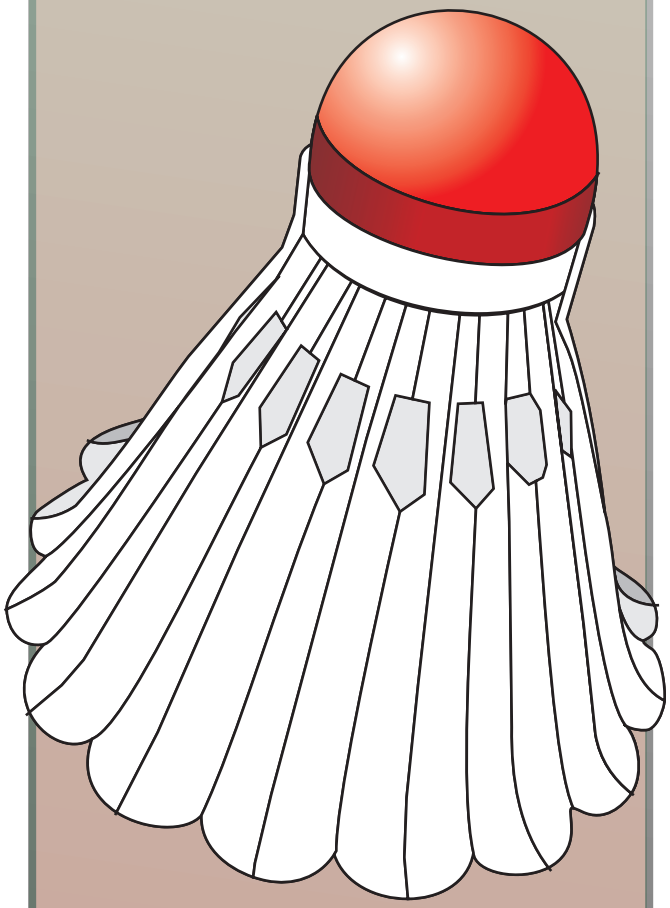

Another reason to fly from:

ODD'L ROCKETS!

Made in the USA, Orlando, FL 32812

Recommended Engines
A3-4T or A10-3T

Height: 2 7/8"
Conical Span: 3"
Empty Weight:

The BIRDIE was a classic Estes "Odd-Ball" rocket kit. Originally the winner of the October, 1968 Design Of The Month Contest, it became a regular catalog item (K-44) from 1970 through 1979.

PARTS LIST:

One Badminton Shuttlecock
One BT-5 Engine Tube, 1 3/4" long
One Launch Lug, 1/8" x 1 3/4"
One 5/60 Adapter Ring
One engine Block Disk

YOU'LL NEED:

White Glue
15 Minute Epoxy
Pencil
Ruler

CONSTRUCTION

1. ☐ Coat one side of the small round disk with white glue. The glue coated side faces down in the engine tube. The glue coat will protect it from the ejection charge.

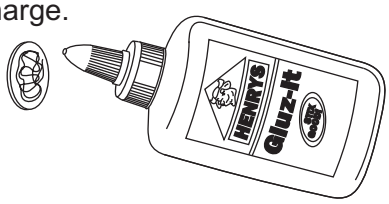

2. ☐ Mark the empty engine casing 1/8" from one end. This will support the gluing of the round disk (engine block) in the next step.

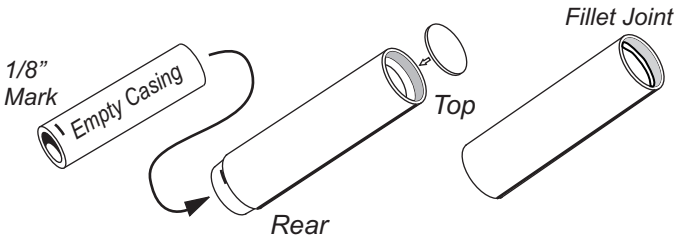

3. ☐ Slide the marked casing into the engine tube up to the 1/8"" mark. Push the plug (glue coat side is to the rear) onto he top of the casing. The casing is to ensure the plug is glued flat, in the correct position. The plug should be approximately 1/16" from the top of the tube. Fillet the plug/tube joint using white glue.

4. ☐ In steps 4 & 5 you are "Dry-Fitting" - NO GLUE!

Slide the Engine Mount Tube through the 5/60 Adapter until 1 1/16" is above the top of the adapter.

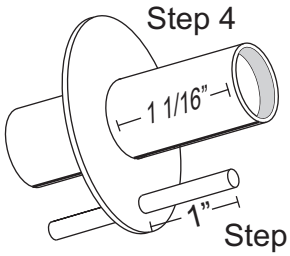

Don't glue in place yet!

Illustrations Copyright 2009 by Hans C. Michielssen

5. ☐ Slide the Launch Lug through the small hole in the 5/60 Adapter Disk. The Lug should be 1" above the top of the adapter. <u>*Don't glue in place yet!*</u>

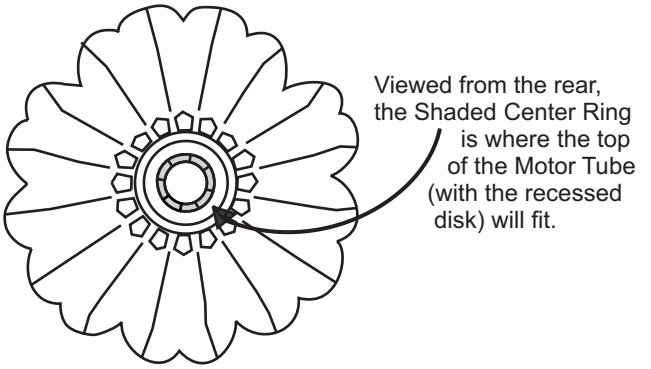

Look inside the nose of the Birdie. You'll see a circular "trough" where the motor mount tube will fit. Test fit the motor assembly without glue.

6. ☐ Mix a small amount of the Epoxy. Dip a scrap stick or dowel into the epoxy and apply inside the nose of the Birdie. Make a full "bead" of Epoxy filling the "trough" inside the nose of the Birdie.

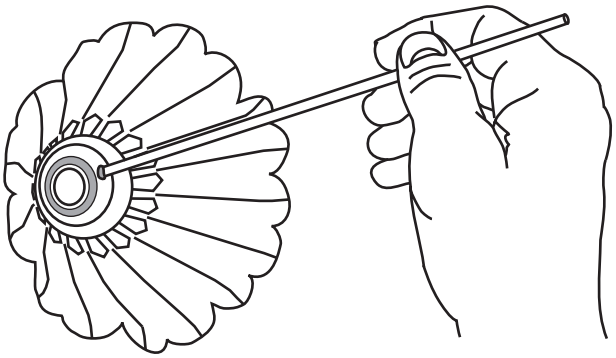

7. ☐ Slide the Motor Mount Assembly into the Birdie. The top of the Motor Mount Tube sits in the wet Epoxy already in the nose cone trough.

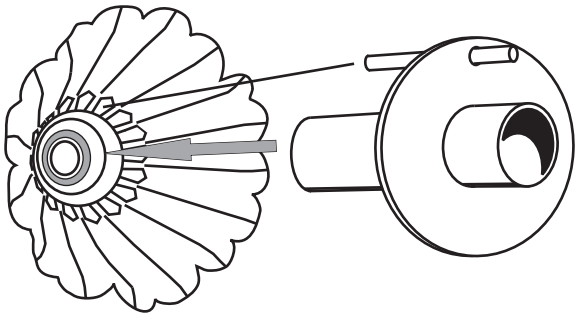

The launch lug slides through one of the (five sided) holes below the round Birdie's nose cone.

IMPORTANT! While the epoxy is still wet, turn the engine mount until the launch lug is straight and vertical.

Let the epoxy dry before proceeding.

Illustrations Copyright 2009 by Hans C. Michielssen

VIEW FROM REAR

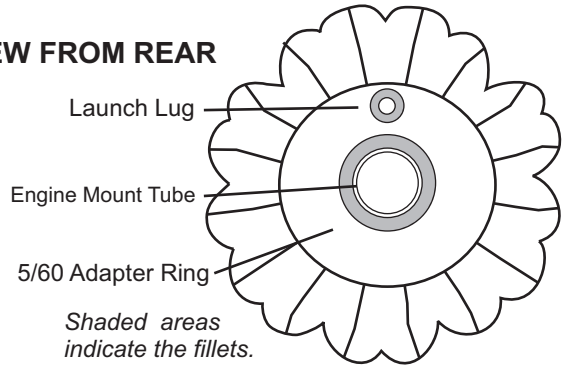

8. ☐ Use white glue to fillet around the engine mount - 5/60 adapter ring joint. The ring's outside edge simply rests against the inside plastic of the Birdie.

The glue fillet is important to hold the ring up against the Birdie's interior. It helps keep the conical shape and gives it structural strength.

Let all glue fillets and epoxy dry.

LAUNCHING NOTES

Recommended Engines:
A3-2T or A10-3T

This is a very simple rocket to prep and fly. Slide in an engine, insert a igniter and you are ready to go!

No parachute, no wadding! The engine simply ejects and the "Featherweight" rocket falls harmlessly to the ground.

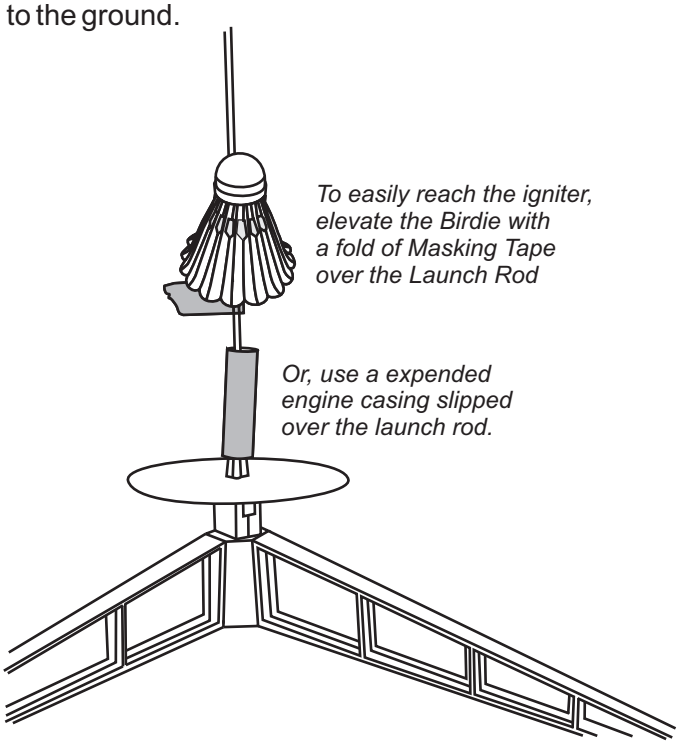

HAVE FUN!
This model is sure to turn heads at the next launch.

Illustrations Copyright 2009 by Hans C. Michielssen