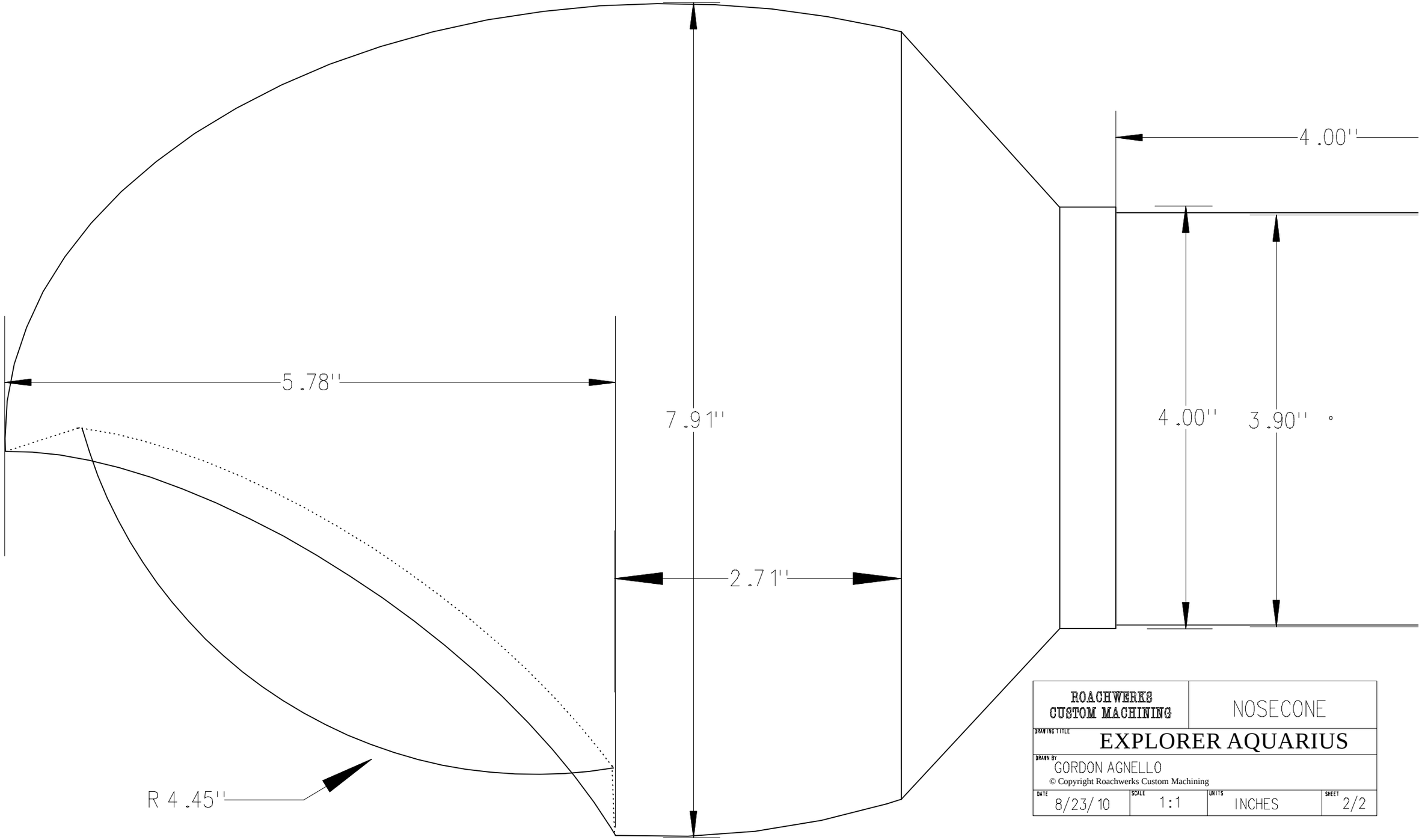

ROACHWERKS CUSTOM MACHINING	NOSECONE	
DRAWING TITLE: EXPLORER AQUARIUS		
DRAWN BY: GORDON AGNELLO		
© Copyright Roachwerks Custom Machining		
DATE: 8/23/10	SCALE: 1:1	UNITS: INCHES / SHEET: 2/2