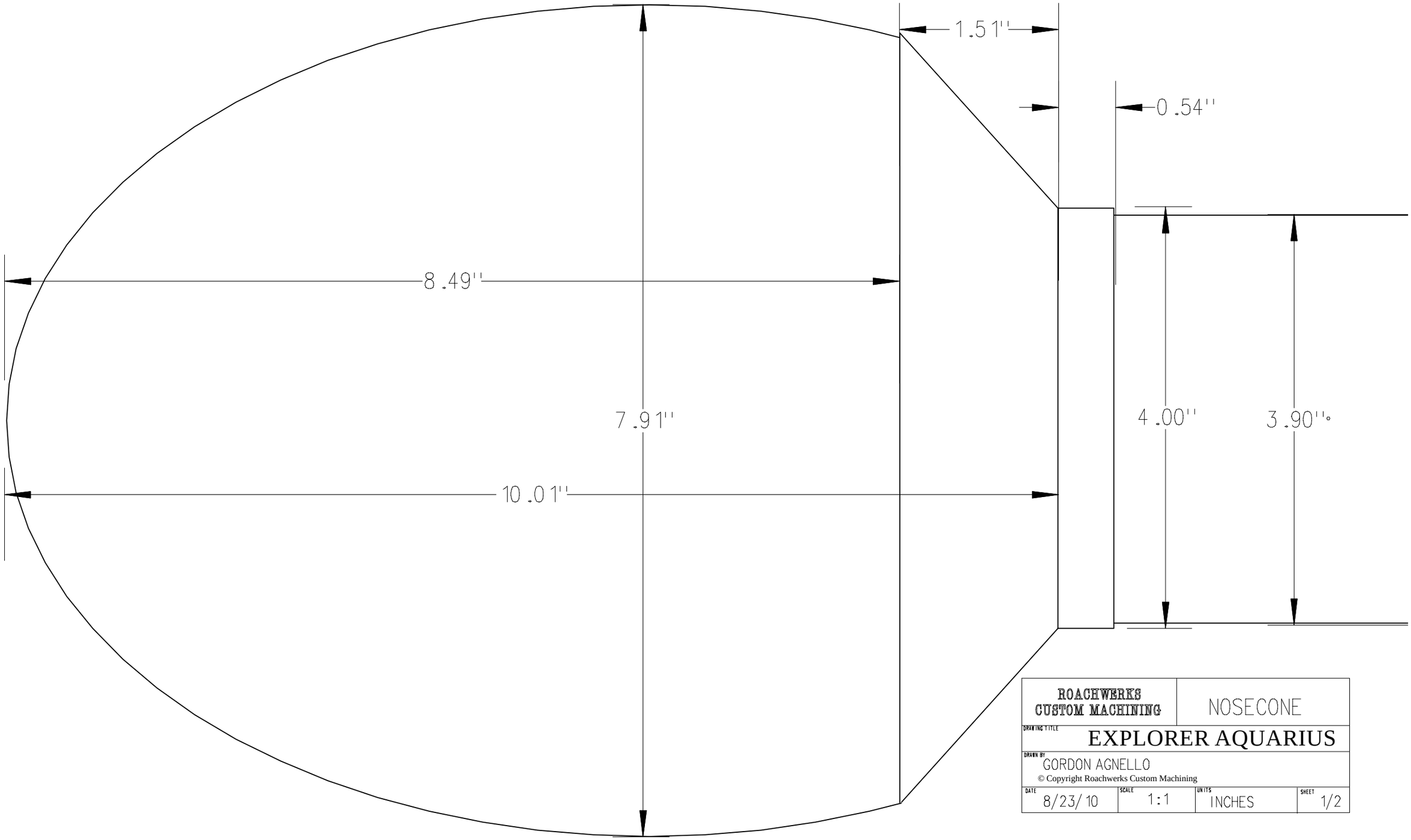

ROACHWERKS CUSTOM MACHINING	NOSECONE		
DRAWING TITLE: EXPLORER AQUARIUS			
DRAWN BY: GORDON AGNELLO			
© Copyright Roachwerks Custom Machining			
DATE: 8/23/10	SCALE: 1:1	UNITS: INCHES	SHEET: 1/2