About Centuri Engineering

Centuri Engineering Company was started in 1961 by Leroy (Lee) Piester in his garage while he was still in college in Phoenix, Arizona. With his wife, Betty, they built Centuri into one of the largest model rocket companies ever.

Centuri was known for its unusual and innovative designs, producing over 140 different kits with something for every model rocketeer. They also produced model rocket engines and pioneered the modern composite high powered engines with their Enerjet line.

Centuri Engineering was sold to Damon in the late 1960's and shared the same parent corporation with Estes Industries, the largest model rocket company in the world. The Centuri product line was kept separate from the Estes line until 1983. A few of the old kits have been reissued by Estes since then, but for the most part, Centuri Engineering Company lives today only in the dreams of the senior members of the model rocket community.

About the Centuri Marauder™

The original Centuri Marauder was released in the 1969 Centuri catalog. It was advertised as an ideal beginner multi-stage rocket using Centuri's "dual-lock" stage coupling, later known as the Pass-Port Staging System. It only had a three year production run, but is still remembered by many as their first two-stage rocket. It was released as #KC-45 and retailed for $2.75.

The Semroc Retro-Repro™ Centuri Marauder™ is very close to the original. The pre-printed fins are replaced with more convenient laser-cut fins. The original balsa nose cone is supplied instead of the later plastic nose cone. The original rubber shock cord is replaced with an elastic cord for longer life along with a Kevlar® cord for greater reliability and ease of mounting.

What is a Retro-Repro?

A Retro-Repro™ is a retro reproduction of an out-of-production model rocket kit. It is a close approximation of a full scale model of an early historically significant model rocket kit from one of the many companies that pioneered the hobby over the past half century. A Retro-Repro™ is not a true clone or identical copy of the original. It incorporates improvements using modern technology, while keeping the flavor and build appeal of the early kits.

July 24, 2009

Copyright © 2009 Semroc Astronautics Corporation
Box 1271 Knightdale, NC 27545 (919) 266-1977

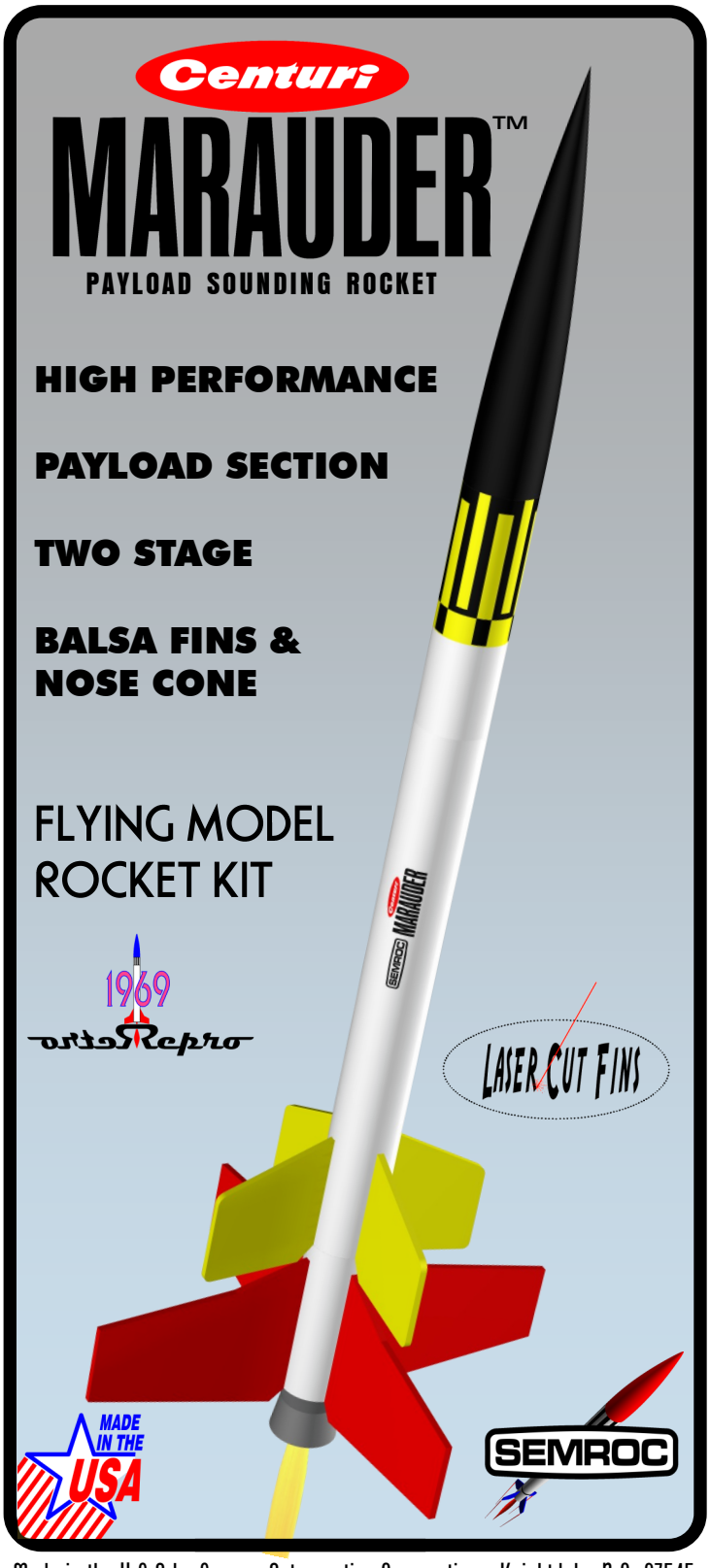

Made in the U.S.A by Semroc Astronautics Corporation - Knightdale, N.C. 27545

CENTURI MARAUDER™
Kit No. KV-32

Specifications		Engine	Approx. Altitude
Body Diameter	.908" (2.3 cm)		
Length	18.1" (46.0 cm)	B6-0,A8-3	850'
Fin Span	6.6" (16.8 cm)	B6-0,B6-6	1200'
Net Weight	1.4 oz. (39.7 g)	C6-0,C6-7	2100'

PARACHUTE RECOVERY

Parts List

A	1	Balsa Nose Cone...	BC-848
B	1	Body Tube.....	ST-873
C	1	Body Tube.....	ST-830
D	1	Body Tube.....	ST-823
E	2	Body Tubes.....	ST-730
F	1	Balsa Coupler.....	BTC-8
G	1	Laser Cut Fins	FV-32
H	1	Tube Coupler	HTC-7B
I	4	Centering Rings	CR-78
J	2	Thrust Rings	TR-7
K	1	Screw Eye	SE-10
L	1	Launch Lug	LL-122
M	1	Elastic Cord.....	EC-118
N	1	Kevlar® Thread.....	SCK-24
O	1	Chute Pak.....	CP-12RY
P	1	Shrouds	IKV-32S
Q	1	Centering Ring.....	CR-78T
R	1	Decal	DKV-32

EXPLODED VIEW

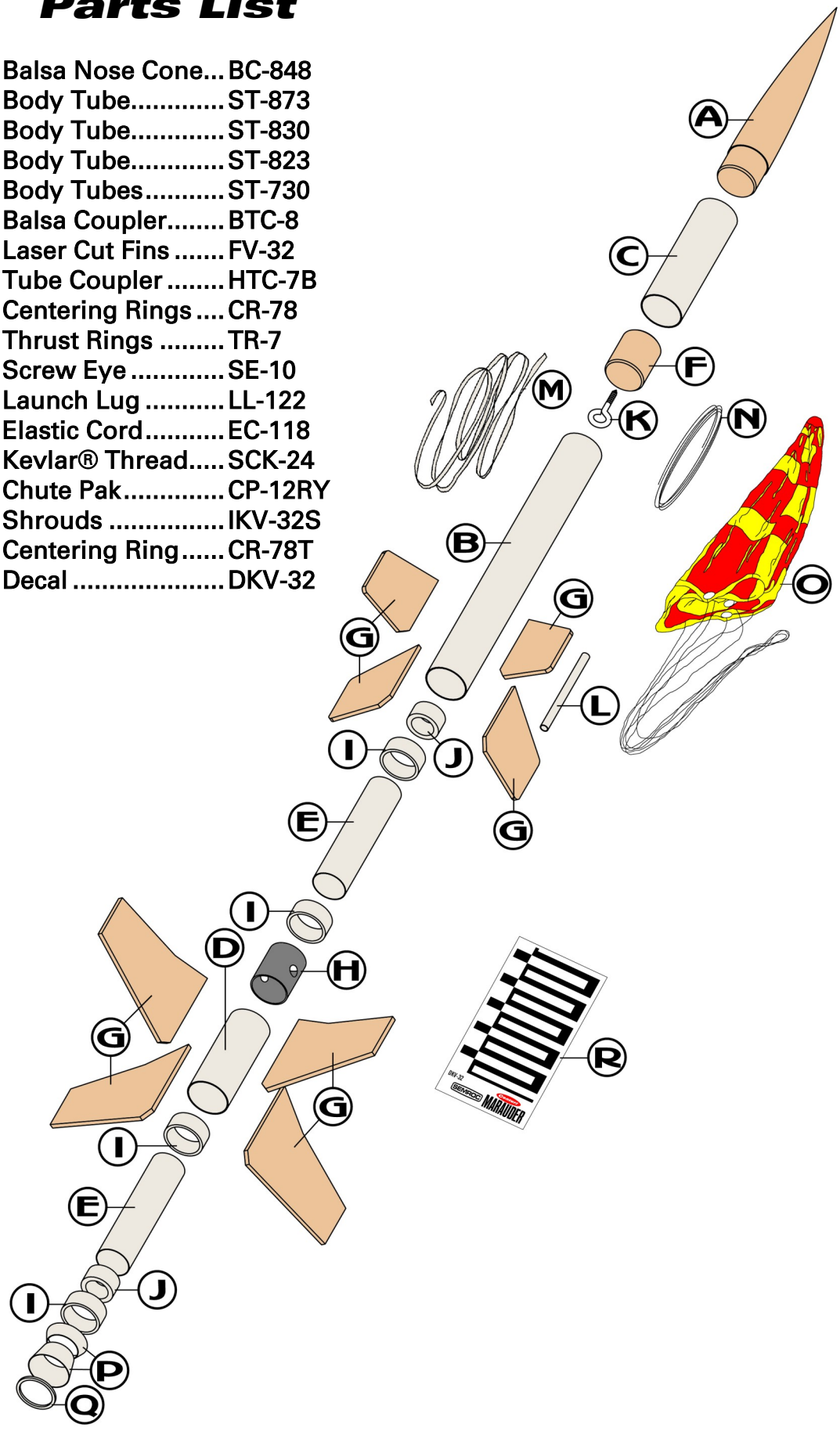

BEFORE YOU START!

Make sure you have all the parts included in this kit that are listed in the Parts List in the center of these instructions. In addition to the parts included in this kit, you will also need the tools and materials listed below. Read the entire instructions before beginning to assemble your rocket. When you are thoroughly familiar with these instructions, begin construction. Read each step and study the accompanying drawings. Check off each step as it is completed. In each step, test-fit the parts together before applying any glue. It is sometimes necessary to sand lightly or build-up some parts to obtain a precision fit. If you are uncertain of the location of some parts, refer to the exploded view in the center of these instructions. It is important that you always ensure that you have adequate glue joints.

TOOLS

In addition to the parts supplied, you will need the following tools to assemble and finish this kit.



ASSEMBLY

❑ **1.** These instructions are presented in a logical order to help you put your Centuri Marauder™ together quickly and efficiently. Check off each step as you complete it and we hope you enjoy putting this kit together.

FIN PREPARATION

❑ **2.** Lightly sand each side of the laser-cut fins (FV-32). Carefully push the laser-cut fins from their sheet. Start at one point on each fin and slowly and gently work around the fin.

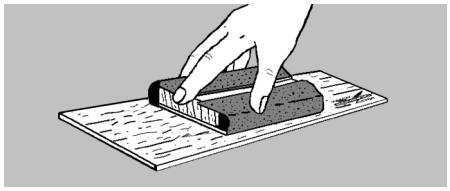

❑ **3.** Stack all the fins in two sets of four. Line the set of fins up squarely and sand the fins back and forth over some fine sandpaper to get rid of the hold-in tabs as shown below.

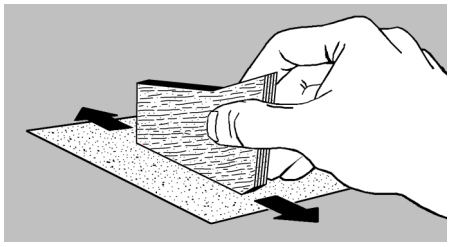

❑ **4.** Round the leading and trailing edges of each fin. Leave the tip and root edges flat. Repeat for all eight fins. The trailing edge can be sanded to a bevel for a more aerodynamic shape.

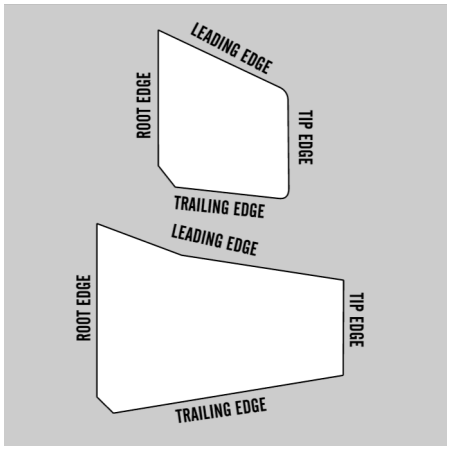

BOOSTER ASSEMBLY

❑ **5.** Glue one of the thrust rings (**TR-7**) into one end of one of the engine tubes (**ST-730**). Make sure the thrust ring is flush with the end of the engine tube.

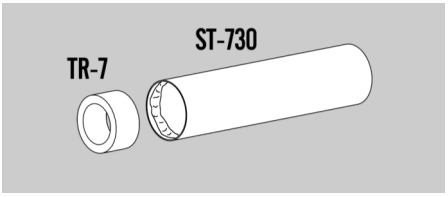

❑ **6.** Slide the tube coupler with two holes (HTC-7B) over the opposite end from the thrust ring until the holes are just about to be blocked by the engine tube. Check for fit and sand if necessary. Remove, apply a bead of glue and slide back into place.

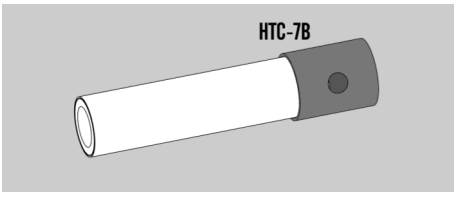

❑ **7.** Glue one centering ring (CR-78) 1/16" from the tube coupler. Glue another centering ring (CR-78) on the opposite end leaving 11/16" of the engine tube exposed. Apply a fillet of glue around the centering rings.

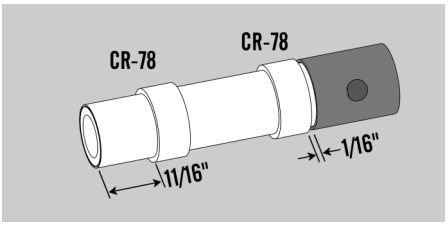

❑ **8.** Locate the booster body tube (**ST-823**). It is the shortest tube (2-1/4".) Stand it on the fin guide below and make the fin position marks on the side of the tube. Find a convenient channel or groove such as a partially open drawer, a door jamb (as shown,) or a piece of molding. Using the channel, extend the marks the full length of the tube to provide lines for aligning the fins. Repeat for the sustainer tube (**ST-873**). Lay the sustainer tube aside for later.

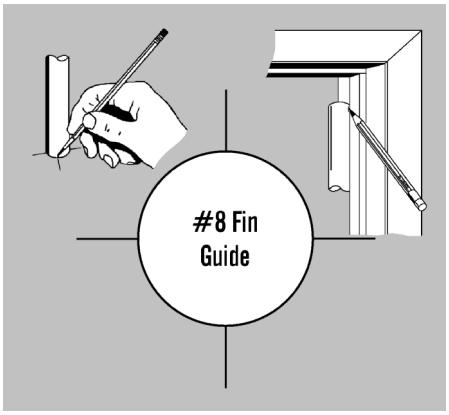

❑ **9.** Apply a bead of glue on the inside of the booster body tube (ST-823) and the inside edges of the centering rings. Slide it over the engine mount assembly until 1/16" of the lower centering ring is still showing. Do this in one movement so the tube does not freeze into place before it is in position. Run a very thin bead around the centering ring and booster tube joint and smooth with your finger.

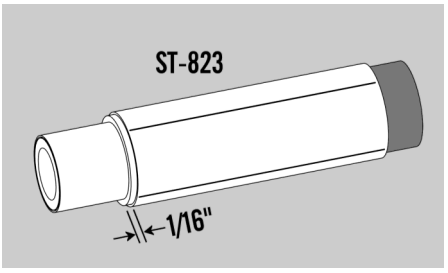

❑ **10.** Cut out the two paper nozzle bands on the solid lines. Curl the smaller shroud into a cone with the glossy side to the outside. Apply a thin film of glue on the area inside the dotted line and smooth with your finger. Line up the opposite edge along the dotted line and hold in place until the glue sets. Slide this cone over the engine tube and against the centering ring and booster body tube. Glue in place.

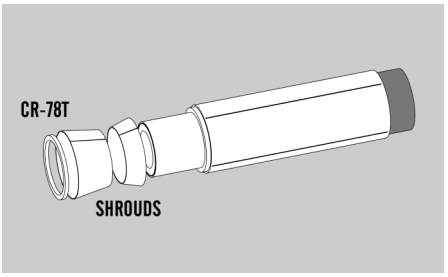

❑ **11.** Repeat with the larger shroud. The fiber ring (CR-78T) completes the assembly. Slide it over the engine tube and against the larger ring. Allow to dry.

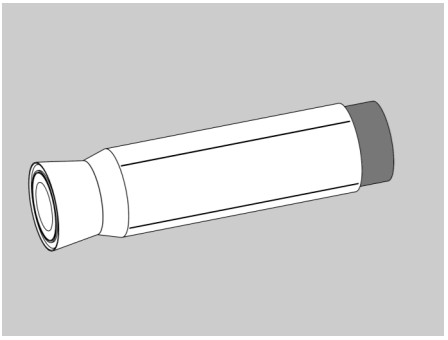

SUSTAINER ASSEMBLY

❑ **12.** Glue the remaining thrust ring (**TR-7**) into one end of the other engine tube (**ST-730**). Make sure the thrust ring is flush with the end of the engine tube. This will be the top of the engine mount.

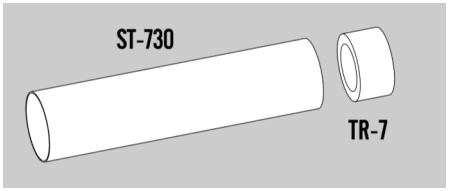

❑ **13.** Tie a large knot in one end of the Kevlar thread. Feed it through a centering ring (CR-78) and glue the ring on the engine tube assembly even with the same end with the thrust block. Glue the remaining centering ring 3/4" from the opposite end of the engine tube. Apply generous fillets around each ring.

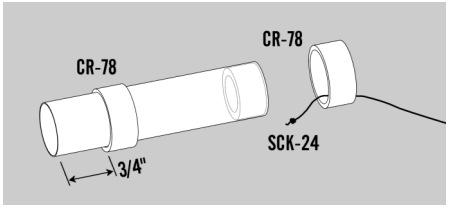

❑ **14.** Make sure the Kevlar knot is secure and pulled against the top centering ring. Allow to dry.

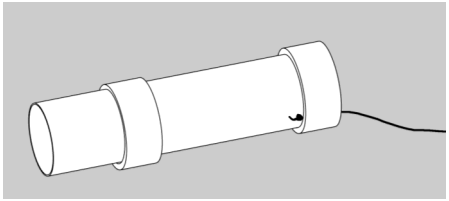

ATTACH MOUNT

❑ **15.** Pull the Kevlar thread back through the engine mount to keep it out of the way. Apply a bead of glue inside the sustainer body tube (ST-873) as shown. Apply a bead of glue around the front edge of both rings as well.

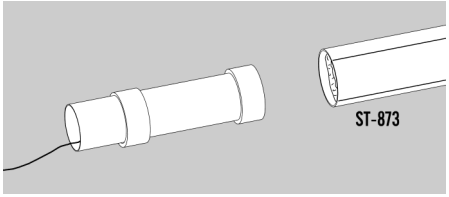

❑ **16.** Insert the engine mount in the sustainer body tube until the ends are flush. Rotate the assembly until the glue has flowed around the rings uniformly. Set it on the end until it is completely dry.

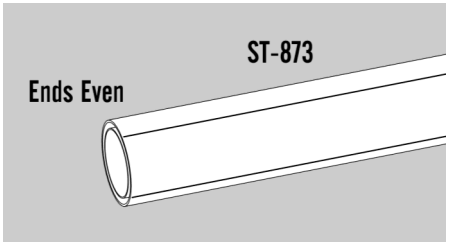

ATTACH FINS

❑ **17.** Apply glue to the root edge of one of the sustainer (smaller) fins and position it along one of the lines drawn for the fins on the side of the sustainer body tube and even with the bottom of the tube. Remove the fin, set it aside and allow it to almost dry, apply additional glue, and reposition. Repeat for the other three fins. If you follow these instructions, the fins will not require much additional work to keep them aligned. Allow the fins to completely dry, checking carefully to make sure they are aligned properly.

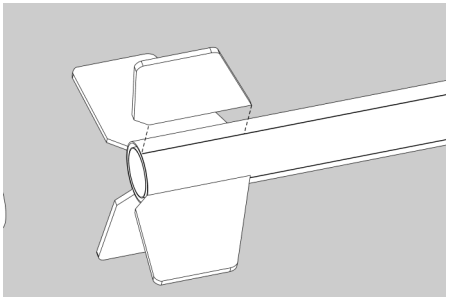

❑ **18.** Apply the booster fins in the same manner. They should also be aligned with the bottom (nozzle) end of the booster assembly. Allow both assemblies to dry in a vertical position, checking for proper alignment while drying.

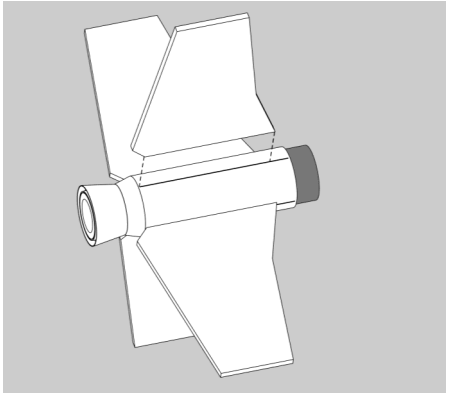

LAUNCH LUG

❑ **19.** Apply a bead of glue to the sustainer tube halfway between two fins for a distance of about 2-1/4" (the length of the launch lug.) Apply the launch lug (**LL-122**) to the glue and make sure it is centered between the fins, parallel with the body tube and even with the bottom of the body tube.

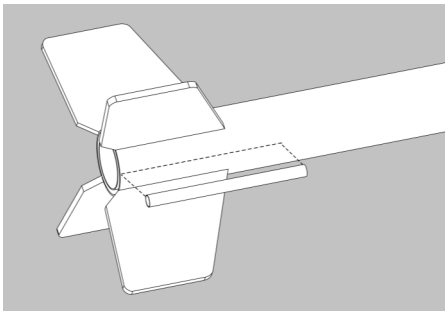

APPLY FILLETS

❑ **20.** After both fin assemblies are completely dry, run a small bead of glue along both sides of each fin-body tube joint. Using your forefinger, smooth the glue into fillets.

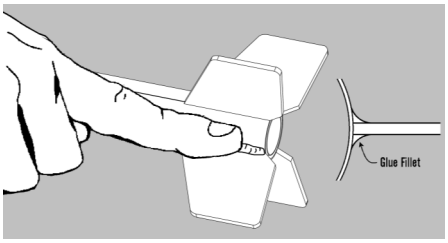

PAYLOAD SECTION

❑ **21.** Insert the nose cone (**ST-848**) in the payload tube (**ST-830**) and check for proper fit. The nose cone should be snug to hold itself in alignment. If it is too loose, add masking tape. If it is too tight, sand the shoulder slightly. Do not glue the nose cone so you can access the payload area. If you will not be adding a payload, the nose cone can be glued in place.

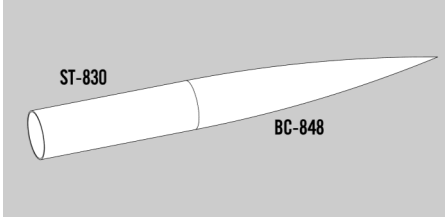

❑ **22.** Check the balsa tube coupler (BTC-8) for fit in the payload tube. It may be necessary to sand it gently if the fit is too tight. Apply glue to the inside of the payload tube at a distance of 1/4" from one end. Slide the coupler into the payload tube until 1/2" is showing. Do not stop until it is in place.

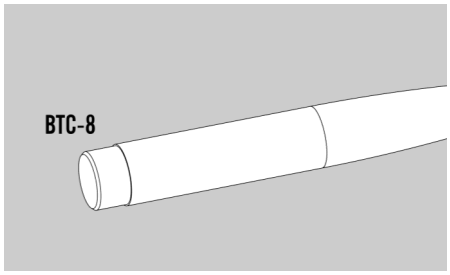

❑ **23.** Turn the screw eye (**SE-10**) into the center of the tube coupler. Unscrew it and squirt glue into the hole. Reinstall the screw eye and wipe off any excess glue.

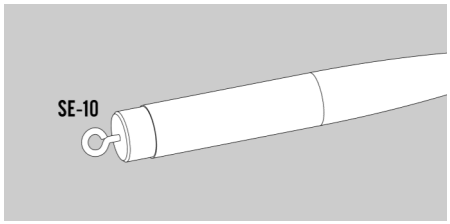

FINAL ASSEMBLY

❑ **24.** Using a pencil or dowel, push the Kevlar cord out through the top of the main body tube. Tie the free end of the Kevlar® cord to one end of the elastic cord (**EC-124**) using an overhand knot leaving about 1" free.

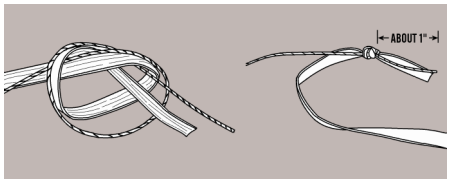

❑ **25.** Assemble the chute using instructions that are printed on the canopy. Pull the lines tight on the chute and make sure they are all of equal length. Attach the chute by tying them to the screw eye. Put a drop of glue on the joint to keep the lines from moving. Attach the free end of the elastic cord to the screw eye. Put a drop of glue on that joint as well.

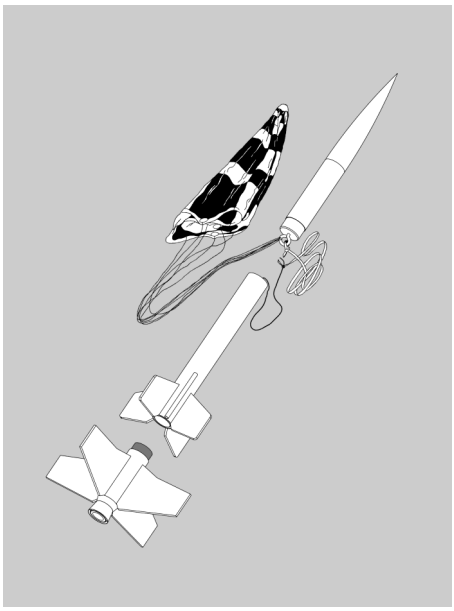

This completes the assembly of your

Centuri
MARAUDER

FINISHING

❑ **26.** When the fillets have dried, prepare balsa surfaces for a smooth professional looking finish. Fill the wood grain with balsa fillercoat or sanding sealer, When dry, sand with fine sandpaper. Repeat until smooth.

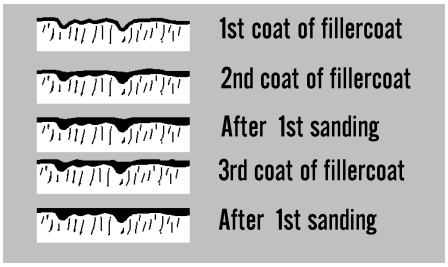

❑ **27.** After all balsa surfaces have been prepared, wipe off all balsa dust with a dry cloth. First spray the model with an enamel primer. Choose a high visibility color like white for the final color.

❑ **28.** Spray painting your model with a fast-drying enamel will produce the best results. PATIENCE…is the most important ingredient. Use several thin coats, allowing each coat to completely dry before the next coat. Start each spray a few inches above the model and end a few inches below the model. Keep the can about 12" away and use quick light coats. The final coat can be a little heavier to give the model a glossy wet-looking finish.

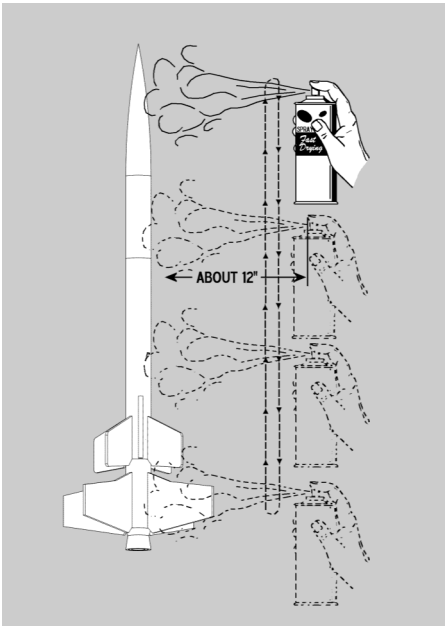

❑ **29.** After the paint has dried, decals should be applied. The decals supplied with the Centuri Marauder™ are waterslide decals. Each decal should be cut separately from the sheet. Think about where you want to apply each decal and check for fit before wetting the decal. Use the cover photo for suggested placement. Dip each decal in a small dish of water that has a drop of detergent. It will take about 30 seconds before the decal is loose enough to apply.

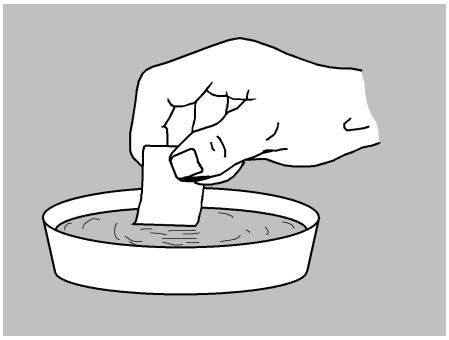

❑ **30.** Slide the decal in place and use the paper backing to work the bubble out. Repeat for all the decals.

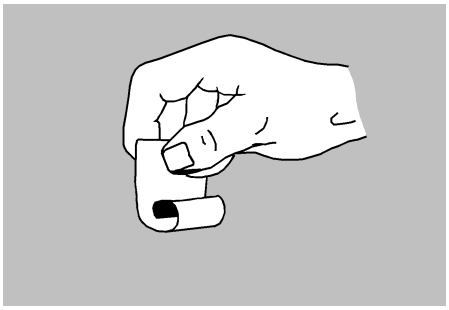

FLIGHT PREPPING

❑ **31.** Mounting the booster engine: Apply a piece of masking tape near the top of the booster engine and install it from the top of the booster. Engines used in the booster stage should always be booster engines with 0 seconds delay such as B6-0 or C6-0.

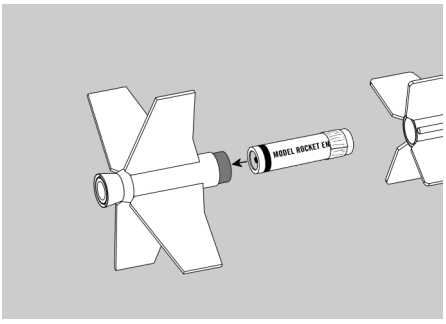

❑ **32.** Mounting the sustainer engine: Apply a piece of masking tape near the bottom of the sustainer engine and install it into the sustainer. Upper stage engines should be long delay. The upper stage may also be flown as a single stage.

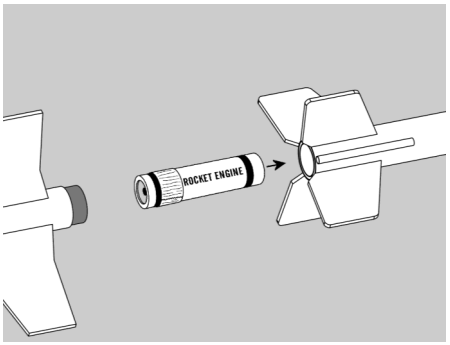

❑ **33.** Apply a few sheets of recovery wadding in the top of the main body tube. Fold the parachute and pack it and the shock cord on top of the recovery wadding. Slide the payload section into place, making sure it does not pinch the shock cord or parachute.

❑ **34.** Refer to the model rocket engine manufacturer's instructions to complete the engine prepping. Different engines have different igniters and methods of hooking them up to the launch controllers.

❑ **35.** Carefully check all parts of your rocket before each flight as a part of your pre-flight checklist. Launch the Centuri Marauder™ from a 1/8" diameter by 36" long launch rod.

❑ **36.** After each flight, promptly remove the spent engine casing and dispose of properly.