About LAUNCH Magazine

After years of dreaming of producing a magazine to celebrate the glory days of model rocketry and months of preparations to make the dream a reality, Mark Mayfield and Deb Martin allowed us to join them on the fabulous ride that became LAUNCH Magazine. Surprising the participants at NARAM-48 in Phoenix in August of 2006, the premier issue was a trip to the past. It featured many of the names that became synonymous with model rocketry; G. Harry Stine, Orville Carlisle, Vern and Gleda Estes and Lee and Betty Piester. Following the trail blazed by George Flynn's *Model Rocketry Magazine* and Danny Sagstetter's *The Rocketeer Collector's Journal*, LAUNCH has joined the nostalgic past with the exciting present. The addition of interviews with professional space pioneers and articles with more general space appeal has expanded the subscription base and recaptured many of the early model rocketeers that left the hobby. LAUNCH has been a labor of love by Mark and Deb that has been much appreciated by their loyal fans.

LAUNCH MAGAZINE

About the LAUNCH Logo

The original LAUNCH Magazine logo featured a rocket embedded in the name. It had many features of the Centuri Laser-X, but was also reminiscent of many of the early model rockets. Drawn by Deb Martin, it became the inspiration for this kit, the LAUNCH Missile. Semroc has been in discussions for months with LAUNCH about producing this as a kit. What better time than now, during a brief hiatus of publishing the magazine, to produce it for the many loyal fans that have stood by Mark and Deb over the years.

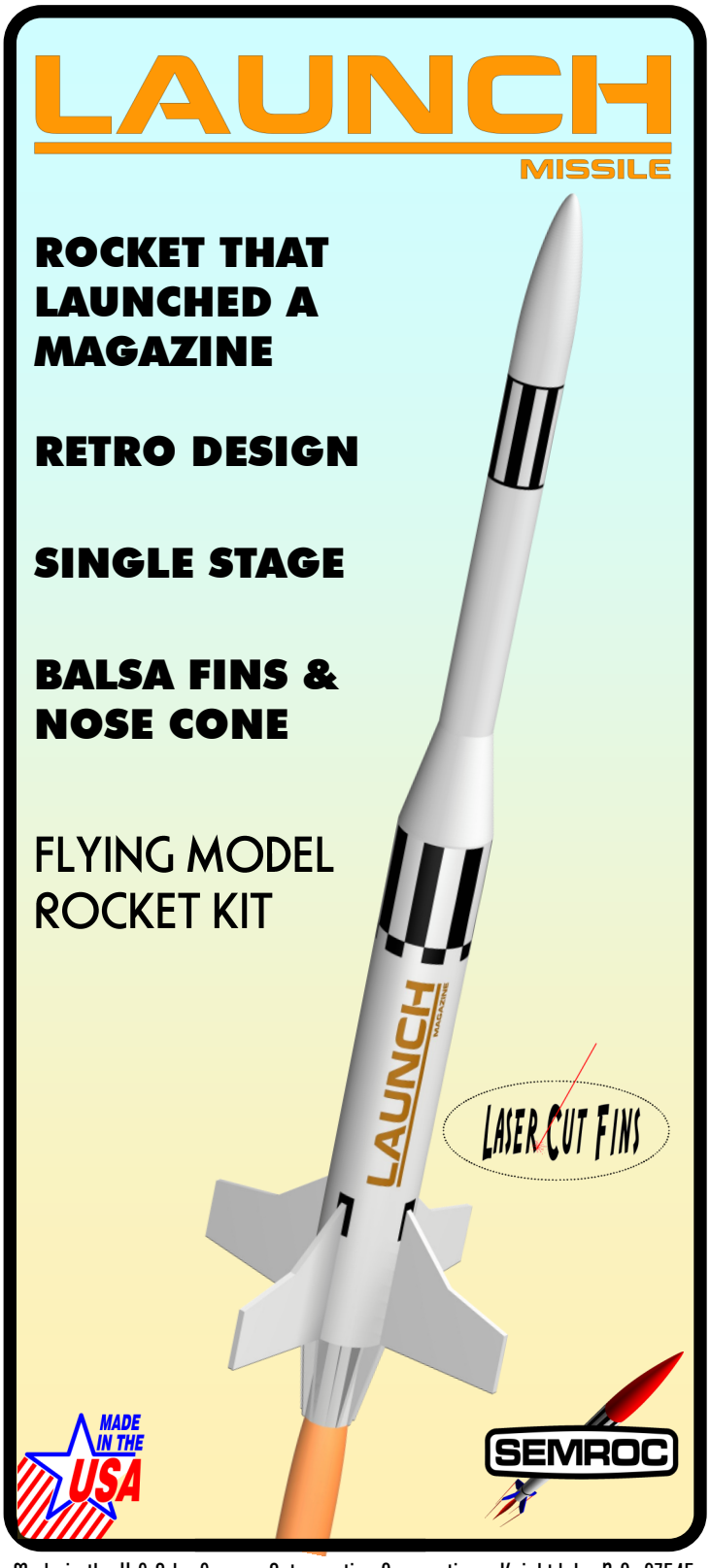

Made in the U.S.A by Semroc Astronautics Corporation - Knightdale, N.C. 27545

LAUNCH Missile™
Kit No. KN-4

Specifications		Engine	Approx. Altitude
Body Diameter	1.34" (3.4 cm)		
Length	18.9" (48.0 cm)	A8-3	200'
Fin Span	5.4" (13.7 cm)	B6-4	500'
Net Weight	1.2 oz. (34.1 g)	C6-5	1000'

PARACHUTE RECOVERY

February 2, 2009

Copyright © 2009 Semroc Astronautics Corporation
Box 1271 Knightdale, NC 27545 (919) 266-1977

Parts List

A	1	Balsa Nose Cone...	BC-720
B	1	Balsa Reducer.....	BR-713
C	1	Body Tube.....	ST-760
D	1	Body Tube.....	ST-1380
E	1	Body Tube.....	ST-730E
F	1	Ring Set	CR-KN-4
G	1	Laser Cut Fins	FN-4
H	1	Engine Hook	EH-28
I	1	Chute Pak.....	CP-12RY
J	1	Screw Eye	SE-12
K	1	Thrust Ring	TR-7
L	1	Elastic Cord.....	EC-124
M	1	Kevlar® Thread.....	SCK-18
N	1	Launch Lug	LL-122
O	1	Decal	DKN-4

EXPLODED VIEW

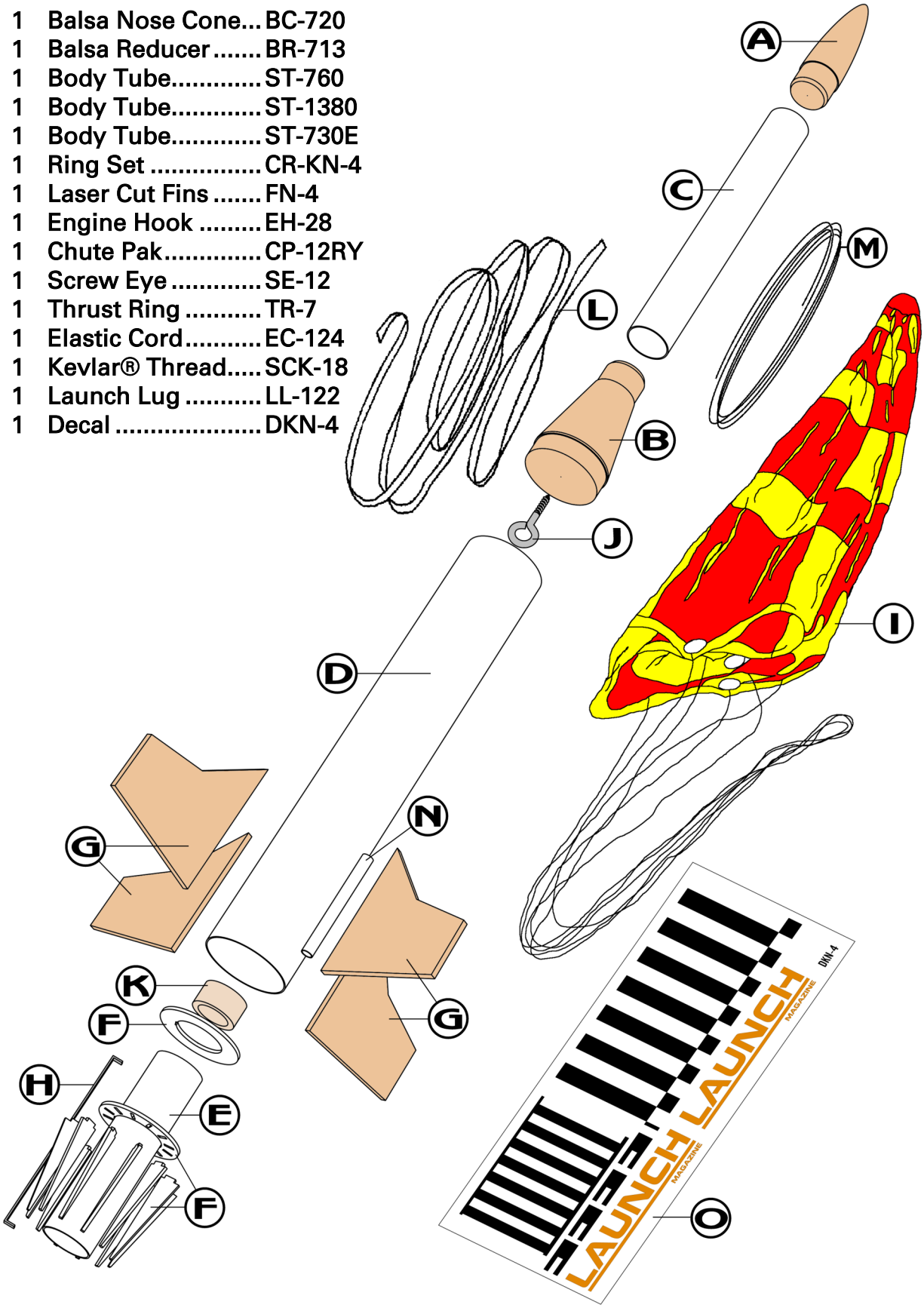

BEFORE YOU START!

Make sure you have all the parts included in this kit that are listed in the Parts List in the center of these instructions. In addition to the parts included in this kit, you will also need the tools and materials listed below. Read the entire instructions before beginning to assemble your rocket. When you are thoroughly familiar with these instructions, begin construction. Read each step and study the accompanying drawings. Check off each step as it is completed. In each step, test-fit the parts together before applying any glue. It is sometimes necessary to sand lightly or build-up some parts to obtain a precision fit. If you are uncertain of the location of some parts, refer to the exploded view in the center of these instructions. It is important that you always ensure that you have adequate glue joints.

TOOLS

In addition to the parts supplied, you will need the following tools to assemble and finish this kit.



ASSEMBLY

❑ **1.** These instructions are presented in a logical order to help you put your LAUNCH Missile™ together quickly and efficiently. Check off each step as you complete it and we hope you enjoy putting this kit together.

FIN PREPARATION

❑ **2.** Lightly sand each side of the laser-cut fins (FV-4). Carefully push the laser-cut fins from their sheet. Start at one point on each fin and slowly and gently work around the fin.

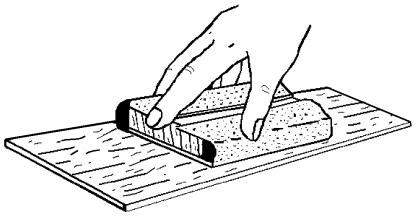

❑ **3.** Stack all the fins in a set. Line the set of fins up squarely and sand the fins back and forth over some fine sandpaper to get rid of the hold-in tabs as shown below.

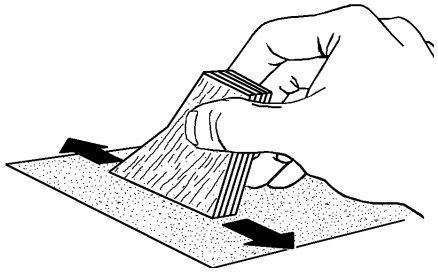

❑ **4.** Round the leading and trailing edges of each fin. Leave the tip and root edges flat. Repeat for all four fins. The trailing edge can be sanded to a bevel for a more aerodynamic shape.

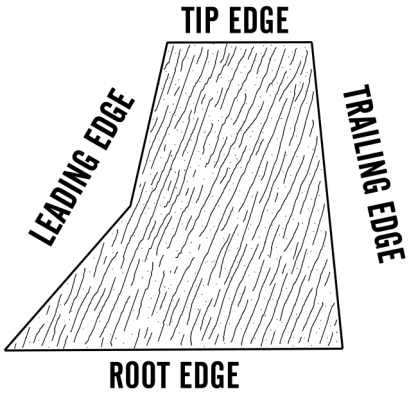

ENGINE MOUNT

❑ **5.** Bend the engine hook (EH-28) slightly so it forms a slight bow in the direction shown.

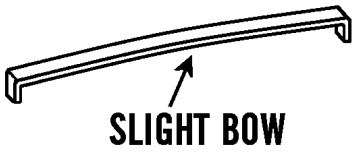

❑ **6.** Tie a loop in one end of the yellow Kevlar® cord (SCK-18). Insert one end of the engine hook through the loop and into the pre-punched engine tube (ST-730E).

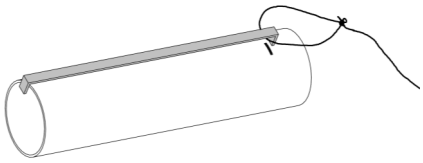

❑ **7.** Glue the thrust ring (TR-7) against the top of the engine hook. After ring is in place, run a bead of glue around the inside of the ring to protect it from the ejection gases.

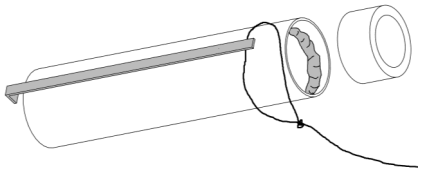

❑ **8.** Carefully punch out both centering rings and the twelve vanes from the fiber set (CR-KV-4). Slide fit the un-slotted centering ring over the bottom of the engine tube and against the Kevlar® cord. Tuck the Kevlar® cord into the engine tube to keep it out of the way until it is needed later.

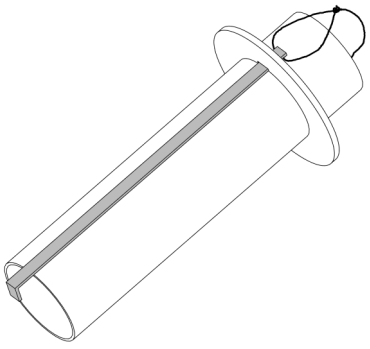

❑ **9.** Slide the other centering ring (with slots) over the engine hook and engine tube until it is 1-1/2" from the bottom of the engine tube. Run a fillet of glue around each side of both of the rings. Keep all glue out of the slots. Allow the glue to dry while checking for runs.

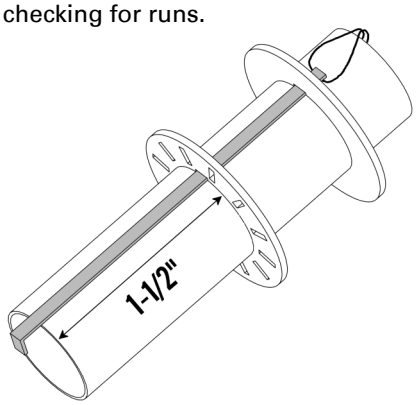

❑ **10.** Insert one of the twelve vanes into a slot near the engine hook. The free end should be just above the end of the engine tube. It should be parallel to the engine hook.

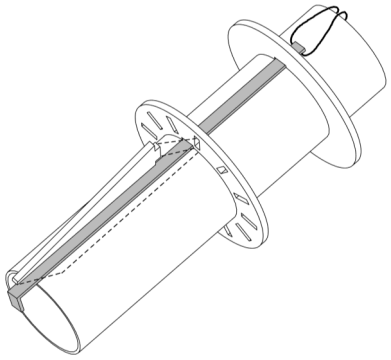

❑ **11.** Insert the remaining vanes in the slots and make sure they are all parallel and evenly spaced. Apply a bead of glue to the top of each slot to capture the vanes. Apply a small bead to the bottom of each vane. When each vane is tacked in position, apply a thin fillet of glue along each joint made with the vane and engine tube.

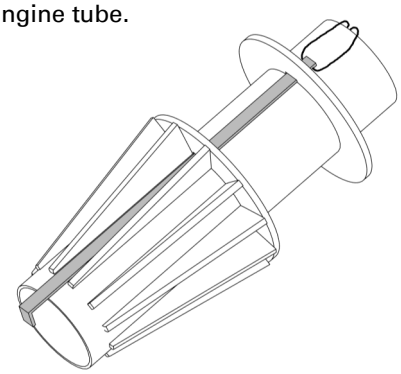

MARK TUBE

❑ **12.** Stand the largest body tube (ST-1380) on the fin guide below and make the fin position marks on the sides of each tube. Also place a mark labeled EH for the engine hook placement later. Find a convenient channel or groove such as a partially open drawer, a door jamb (as shown,) or a piece of molding. Using the channel, extend the marks the full length of the tube to provide lines for aligning the fins.

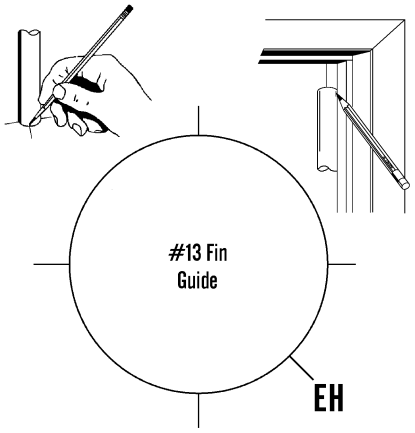

ATTACH MOUNT

❑ **13.** Apply a thick bead of glue inside the aft end of the main body tube and on the top side of the bottom ring (opposite the vanes.) Insert the engine mount assembly with the thrust ring end first into the main body tube until the bottom ring and vanes are flush with the end of the main tube. Do not stop until it is in the correct place. Make sure the EH mark is directly over the engine hook. Proceed to the next step!

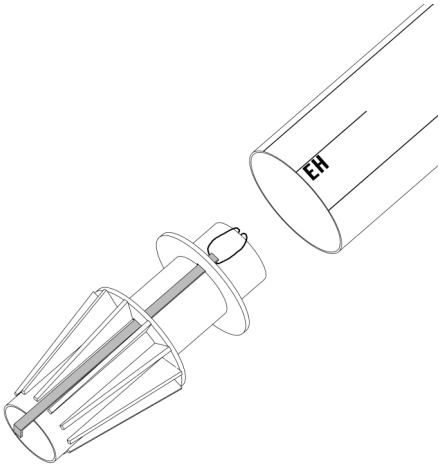

❑ **14.** Before the glue dries, make sure each of four vanes are aligned with the fin marks. Allow to dry completely in a vertical position.

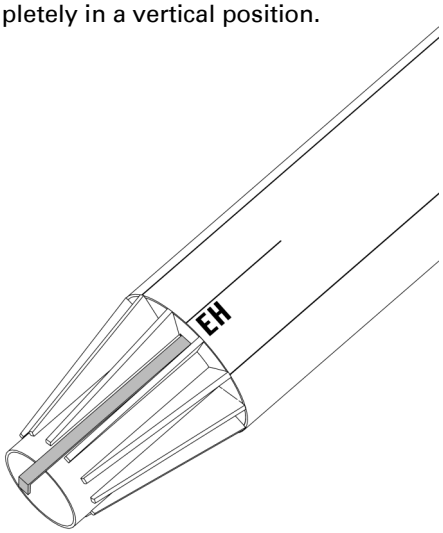

ATTACH FINS

❑ **15.** Apply glue to the root edge of one of the fins and position it along one of the lines drawn for the fins on the side of the body tube. Remove the fin, set it aside and allow it to almost dry, apply additional glue, and reposition. Repeat for the other three fins. If you follow these instructions, the fins will not require much additional work to keep them aligned. Allow the fins to completely dry, checking carefully to make sure they are aligned properly.

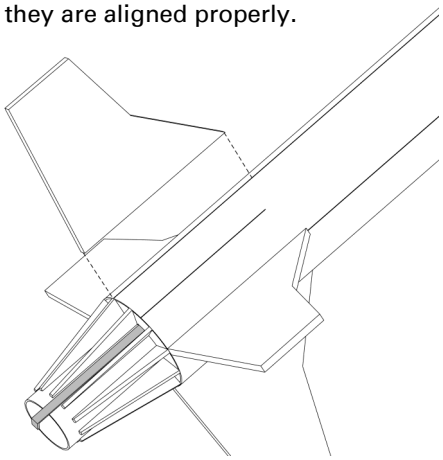

LAUNCH LUG

❑ **16.** Apply a bead of glue to the line marked EH near the bottom of the main body tube for a distance of about 2-1/4" (the length of the launch lug.) Apply the launch lug (LL-122) to the glue and make sure it is directly over the line and even with the bottom of the main body tube.

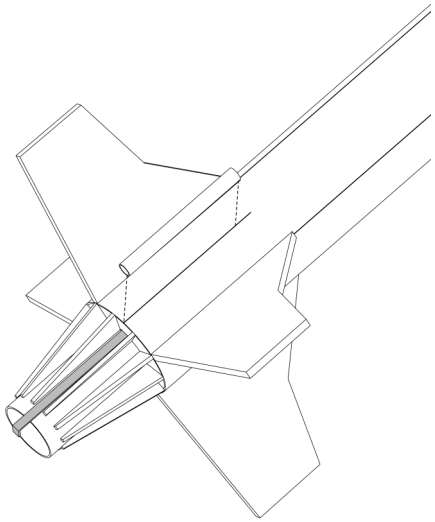

APPLY FILLETS

❑ **17.** After the fin assembly is completely dry, run a small bead of glue along both sides of each fin-body tube joint. Using your forefinger, smooth the glue into fillets. Apply a fillet of glue on each side of the launch lug. Allow this assembly to dry in a vertical position.

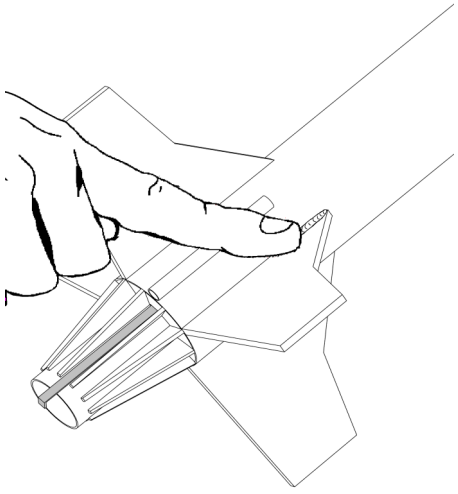

PAYLOAD SECTION

❑ **18.** Insert the nose cone in the payload tube and check for proper fit. The nose cone should be snug to hold itself in alignment. If it is too loose, add masking tape. If it is too tight, sand the shoulder slightly. Do not glue the nose cone so you can access the payload area. If you will not be adding a payload, the nose cone can be glued in place.

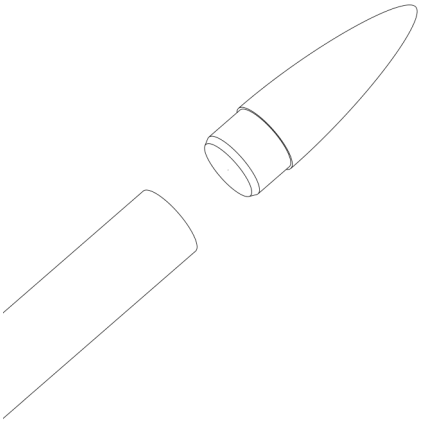

❑ **19.** Check the reducer for fit in the payload tube (ST-760.) It may be necessary to sand it gently if the fit is too tight. Apply glue to the inside of the payload tube at a distance of 1/4" from one end. Slide the reducer into the payload tube without stopping until it is in place.

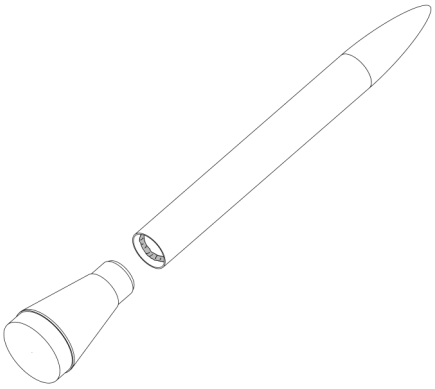

❑ **20.** Turn the screw eye (SE-12) into the center of the base (largest end) of the balsa reducer. Unscrew it and squirt glue into the hole. Reinstall the screw eye and wipe off any excess glue.

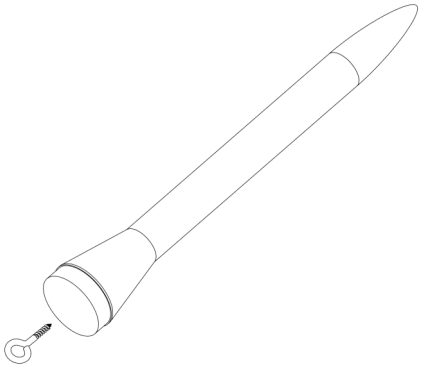

FINAL ASSEMBLY

❑ **21.** Using a pencil or dowel, push the Kevlar cord out through the top of the main body tube. Tie the free end of the Kevlar® cord to one end of the elastic cord (EC-124) using an overhand knot.

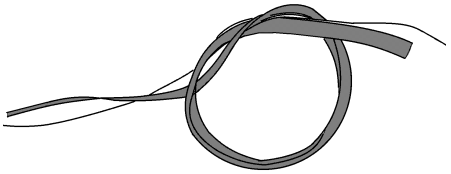

❑ **22.** Assemble the chute using instructions printed on the canopy. Pull the lines tight on the chute and make sure they are all of equal length. Attach the chute by tying them to the screw eye. Put a drop of glue on the joint to keep the lines from moving. Attach the free end of the elastic cord to the screw eye. Put a drop of glue on that joint as well.

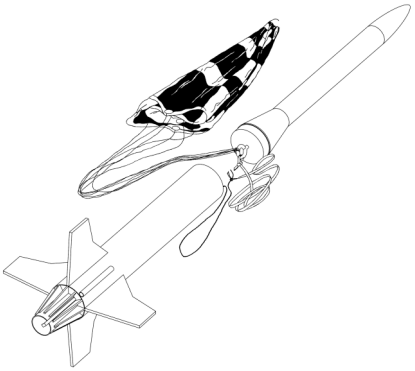

This completes the assembly of your

LAUNCH
MISSILE

FINISHING

❑ **23.** When the fillets have dried, prepare balsa surfaces for a smooth professional looking finish. Fill the wood grain with balsa fillercoat or sanding sealer, When dry, sand with fine sandpaper. Repeat until smooth.

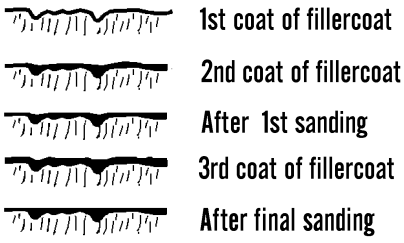

❑ **24.** After all balsa surfaces have been prepared, wipe off all balsa dust with a dry cloth. First spray the model with an enamel primer. Choose a high visibility color like white for the final color.

❑ **25.** Spray painting your model with a fast-drying enamel will produce the best results. PATIENCE...is the most important ingredient. Use several thin coats, allowing each coat to completely dry before the next coat. Start each spray a few inches above the model and end a few inches below the model. Keep the can about 12" away and use quick light coats. The final coat can be a little heavier to give the model a glossy wet-looking finish.

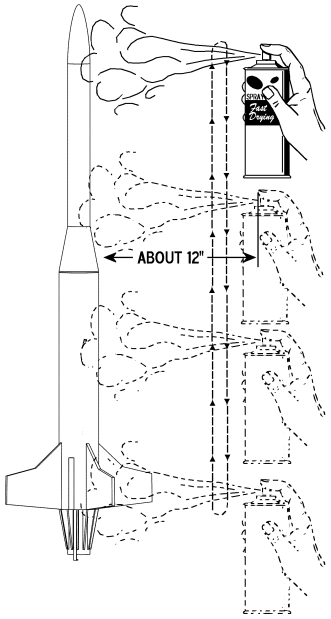

❑ **26.** After the paint has dried, decals should be applied. The decals supplied with the LAUNCH Missile are waterslide decals. Each decal should be cut separately from the sheet. Think about where you want to apply each decal and check for fit before wetting the decal. Use the cover photo for suggested placement. Dip each decal in a small dish of water that has a drop of detergent. It will take about 30 seconds before the decal is loose enough to apply.

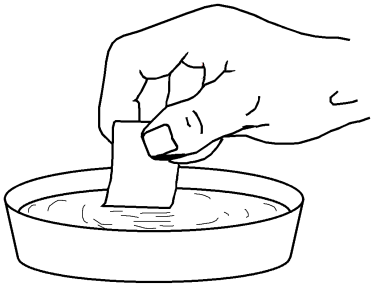

❑ **27.** Slide the decal in place and use the paper backing to work the bubble out. Repeat for all the decals.

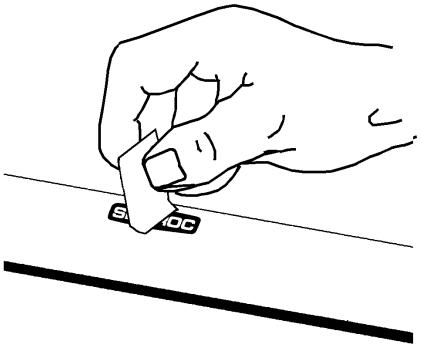

FLIGHT PREPPING

❑ **28.** Mounting the engine: Insert the engine and make sure the engine hook keeps the engine in snugly. The hook may be slightly bent to make sure the engine is retained.

❑ **29.** Apply a few sheets of recovery wadding in the top of the main body tube. Fold the parachute and pack it and the shock cord on top of the recovery wadding. Slide the payload section into place, making sure it does not pinch the shock cord or parachute.

❑ **30.** Refer to the model rocket engine manufacturer's instructions to complete the engine prepping. Different engines have different igniters and methods of hooking them up to the launch controllers.

❑ **31.** Carefully check all parts of your rocket before each flight as a part of your pre-flight checklist. Launch the LAUNCH Missile from a 1/8" diameter by 36" long launch rod.

❑ **32.** After each flight, promptly remove the spent engine casing and dispose of properly.