Exploded View

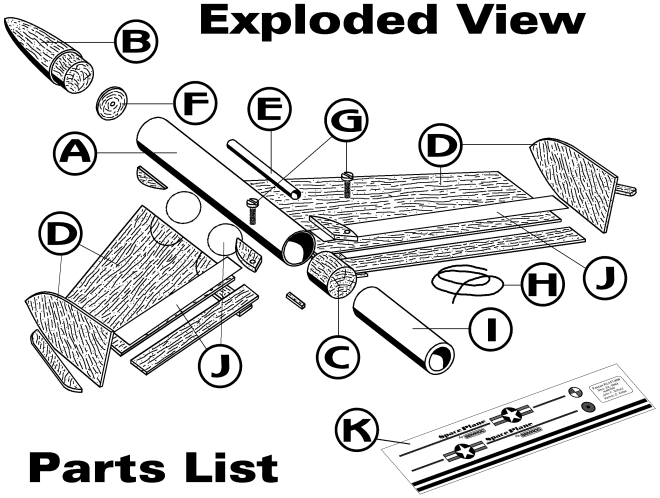

Parts List

Item	Estes Part #	Semroc Part #	Description
A	BT-30C	BT-30C	Body Tube 5.5" Long
B	BNC-30E	BNC-30E	Balsa Nose Cone
C	NB-30	NB-30	Balsa Nose Block
D	BFS-20	FES-K3	Laser-Cut Balsa Fins
E	LL-1B	LL-2B	Launch Lug
F	NCW-1	WL-7	Lead Weight
G	AS-1	NS-45	Nylon Screws
H	ET-1	ET-18	Elastic Thread
I	EC-1	MC-727	Empty Casing
J	TD-1 TH-1	IXES-K3H	Plastic Hinges & Discs
K	N/A	DES-K3	Decal

100% SATISFACTION GUARANTEE

If you are not 100% satisfied with your Semroc product, we will make it right by providing whatever you consider fair, from refund to replacement.

Contact us at:
Semroc Astronautics Corporation
Customer Service Department
P.O. Box 1271
Knightdale, North Carolina 27545

JOIN THE NAR!

Sign up online at www.nar.org to join the premier model rocketry organization. Semroc fully supports the National Association of Rocketry and recognizes it as the sport's official voice. Check online at www.semroc.com/nar for promotions just for NAR members.

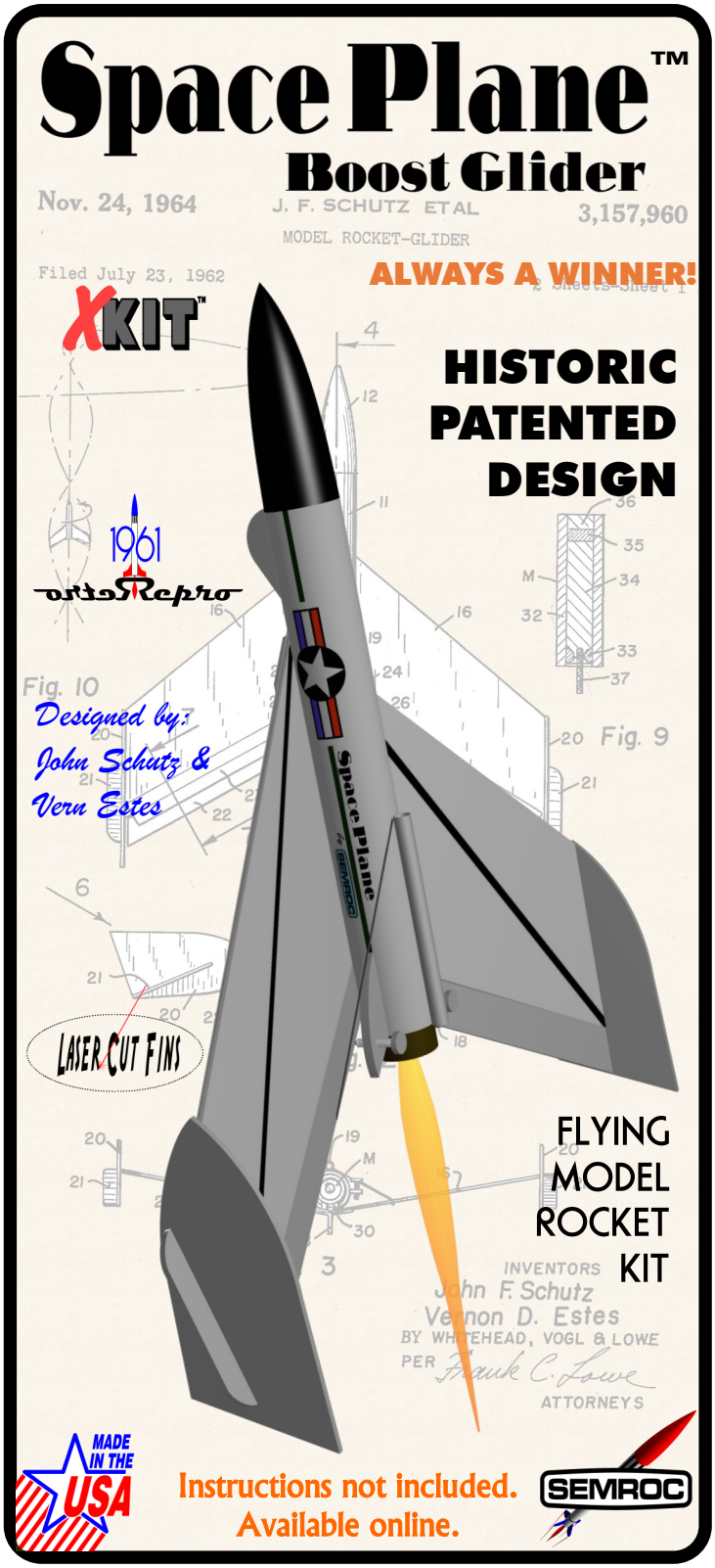

Made in the U.S.A by Semroc Astronautics Corporation - Knightdale, N.C. 27545

SPACE PLANE™
Kit No. XES-K3

Specifications		Engine	Approx. Altitude
Body Diameter	.767" (1.9 cm)	1/2A6-2	200'
Length	10.0" (25.4 cm)	B4-2	400'
Wing Span	9.0" (22.9 cm)	B6-2	450'
Net Weight	0.5oz. (13.9 g)		

GLIDE RECOVERY

What is an xKit™?

A Semroc xKit™ is a kit designed for the expert modeler. It is a reproduction of the materials found in an early, historically significant model rocket kit. The parts are close enough that the original instructions can be used to construct the kit. Copies of original instructions of many early out-of-production kits are available online from several sources, the two best-known being Jimz and oldrocketplans.com. The xKit™ line is only available online and is intended for advanced builders that have experience with the instructions and designs from the early days of model rocketry.

About Estes Industries, Inc.

In July 1958, G. Harry Stine of Model Missiles, Inc. in Denver, Colorado approached Vern Estes about making model rocket engines for them. On January 15, 1959, Vern's automated model rocket engine fabricating machine, "Mabel", produced the first of many millions of Estes model rocket engines. In 1960, Estes was producing more engines than Model Missiles could sell. Vern and his wife Gleda opened a mail order rocket company and introduced the Astron Scout and Astron Mark.

In 1961, a catalog was mimeographed and hand stitched on Gleda's sewing machine. Later that year, Estes Industries had outgrown the confined space in Denver. In December 1961, the entire operation was moved to an old farm in Penrose, Colorado quickly establishing the small town as the "Model Rocket Capital of the World."

Estes Industries was sold to Damon in September 1969. The name Estes is synonymous with model rocketry. Almost everyone remembers growing up firing Estes rockets or knowing someone that did. Estes Industries has introduced millions of youngsters of all ages to model rocketry for almost half a century.

March 3, 2005 (cc:Kit)
May 19, 2008 (xKit™)

Copyright © 2008 Semroc Astronautics Corporation
Box 1271 Knightdale, NC 27545 (919) 266-1977

About the Space Plane™

The Space Plane was invented by John Schutz and Vern Estes in 1961. It was the first mass produced Boost Glider kit. A patent was filed in July, 1962 and Patent Number 3,157,960 was granted on November, 1964. Following the Astron Scout and Astron Mark, the Space Plane was a departure from the early recovery systems, using glide recovery instead of streamers and parachutes. The Space Plane was introduced in the 1962 Catalog as Vern and Gleda Estes' third kit with Catalog #K-3 and an introductory price of $1.80.

The Space Plane was the first of many Boost Gliders and Rocket Gliders from Estes Industries and other manufacturers. Having a model rocket launch as a rocket and return as a glider is commonplace today, but was truly innovative at the time. Many of the newer designs were more efficient and easier to build and the Space Plane was retired in 1971 after securing its place in model rocket history.

The Semroc Space Plane™ xKit™ is a very close approximation of the original kit. Laser-cut fins are provided using the original patterns as models. The hinges are made of a more durable plastic adhesive instead of the original paper. Waterslide decals are provided that were not present in the original kit.

Plans are not provided in this kit but they are available are online at http://www.dars.org/jimz/k-03.htm thanks to the tireless efforts of Jim Zalewski and the generosity of Estes Industries in allowing him to help preserve the past.

Construction Notes

1. The Space Plane™ is not a beginner kit. A certain degree of modeling skills are required for this kit.

2. The instructions should be read and understood before beginning construction.

3. The 3/32" laser-cut small balsa parts are cut from a hard sheet of balsa, but the area around the screw holes and the bottom of the skid should be reinforced with Cyanoacrylate (CA) glue.

4. After cutting the slot at the aft of the body tube, use CA glue on the exposed edges to lengthen the life of the tube.

5. The top, rear corner of each of the stabilizers is not supported. To prevent breakage, use CA or a strip of balsa along the trailing edge to stiffen it.

6. A lead weight is provided as in the original kit, but a screw eye and small washers may be easier to use to balance the kit.