Centuri Engineering Company's

BLACK WIDOW KIT
Modification Instructions

In our constant effort to improve all Centuri models, the Black Widow two-stage model rocket kit has recently been modified to give higher altitude flights. Also, a recent change in Centuri's engine nozzle design now requires that an additional step be taken in the engine preparation to assure reliable second stage ignition.

A) First, the change from a hardwood nose cone to a balsa wood cone has resulted in a 15% increase in possible flight altitude. In addition to the balsa cone, two additional parts have been added to the kit:

1) Screw Eye 2) Set of 2 Nose Weights

The method for attaching the screw eye and stabilizing nose weights to the nose cone is shown in the drawing below:

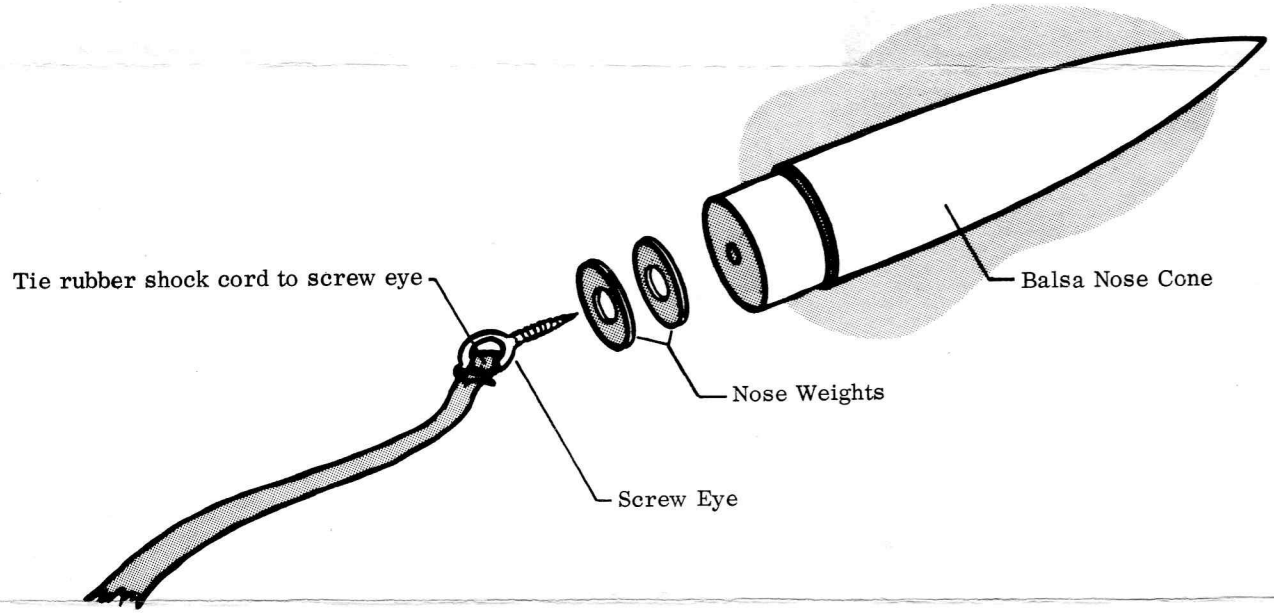

First, thread the screw eye into the cone base. Unthread the eye from the cone and place a drop of white glue in the resulting hole. Place the two nose weights over the screw eye and thread the eye back into the cone base. After the glue has dried, tie one end of the shock cord to the screw eye. Trim off any loose end. Attach the other end to the body tube as shown in Figure 6. Cut two slits in the body tube about 3/4" from the top end. Insert the cord end into the body tube from the top end. Bring the cord end out through the first slit and back into the body tube through the second slit. Apply white glue to this connection to form a good bond.

B) To assure reliable ignition of the second stage engine, it is necessary to insert a short length of Jetex wick into the second stage engine nozzle. Using the method outlined in Centuri's Engine Operating Instructions, take a piece of wick about $2\frac{1}{2}$" long and fold one end so that a 5 to 7 strand end is formed. Insert this folded end into the engine nozzle. Push in as far as possible and secure by pushing a pencil or ball point into the folded end. Make sure that the wick will not fall out of the nozzle under acceleration. The extended portion of the wick should measure about $1\frac{1}{2}$" long.

Slip booster tube over the sustainer engine. It may be necessary to wrap the extended portion of the sustainer engine with cellophane tape to give a wobble-free connection.

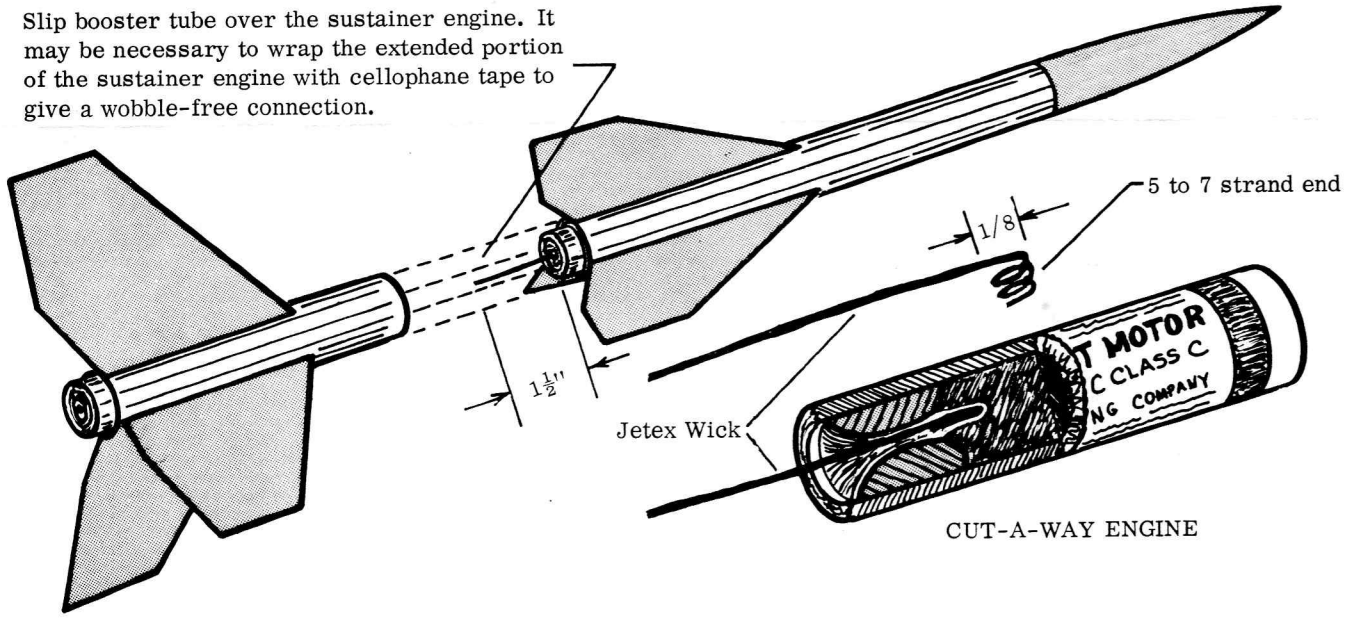

CUT-A-WAY ENGINE