Black Widow Kit

INTRODUCTION

The Black Widow model rocket was designed to demonstrate the basic fundamentals of two stage sounding rockets. When properly assembled, the Black Widow is capable of reaching altitudes in excess of 1500 feet. The second stage vehicle uses parachute recovery, while the booster section features a unique glide recovery system which allows it to soar like a bird back to earth. The Black Widow second stage works equally well as a single stage by itself. Read the instructions through carefully before starting to assemble the parts.

SECOND STAGE ASSEMBLY INSTRUCTIONS

To assemble the sustainer or second stage, the following parts are needed:

PART NO.	PART NAME
1	8" Body Tube
2	Nose Cone
3	Bulkhead
4	Fin Material
5	Plastic Chute Mat'l
6	Shroud Line
7	Rubber Shock Cord
8	Tape Discs
9	Launching Lug
10	Engine Spacing Tube

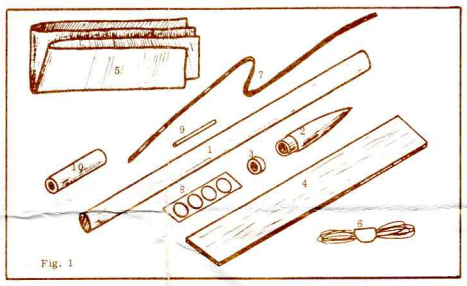
Fig. 1

In addition to the above parts, the following materials will be needed to assemble the Black Widow:

Modeling knife or single edge razor blade
Strong, fast drying model cement or glue
Paint for finishing-preferrably spray type
Pencil
Scissors
Fine Sandpaper

POSITIONING BULKHEAD

Insert the engine bulkhead into the base of the body tube and position according to Fig 2a. When the bulkhead is correctly positioned, the engine spacing tube will extend 3/8" beyond the end of the body tube as shown in Fig. 2b.

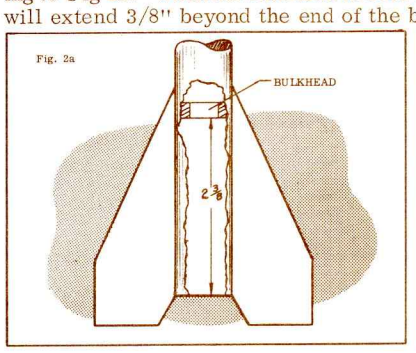

Fig. 2a

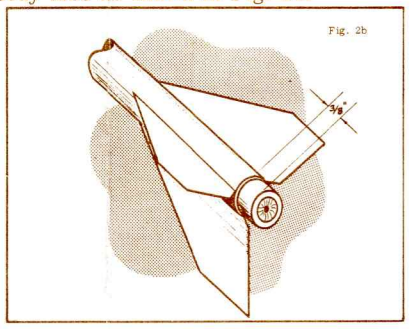

Fig. 2b

Glue the bulkhead firmly in place by dripping several drops of Wilhold or similar white glue into top of the body tube, aiming at joint between bulkhead and body tube. Use the engine spacing tube to hold the bulkhead in place while drying. Be careful not to glue the engine spacing tube in the body tube. Allow the glue to set before proceeding to the next step.

SETTING THE STABILIZER FINS

Now, set the body tube on end and place in the center of the circle in Fig. 3. With a pencil, mark the fin locations on the tube.

Next, cut out 3 stabilizer fins from the 3/32" balsa stock using the pattern in Fig. 5, on the pattern sheet. Make sure that the balsa grain is running in the direction shown. This gives maximum strength in flight. Sand each fin as shown in Fig. 4. Round the leading edge and taper the trailing edge.

Insert the engine spacing tube into the base of the body tube. This helps to keep the body tube round while glueing on the fins. Glue each fin, one at a time to the body tube as shown in Fig. 3. Greatest strength is obtained by running a bead of glue along the tube-fin joint after the initial glueing has completely dried. Make sure that the root chord of each fin is lined up parallel with the long axis of the body tube. The base of each fin (trailing edge) should extend 3/8" below the end of the body tube.

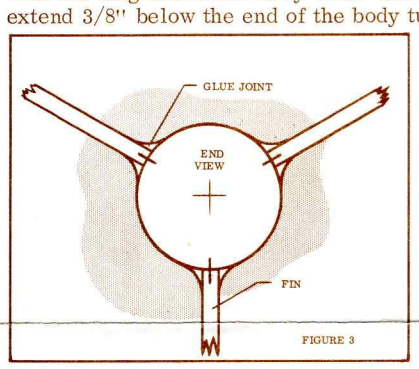

FIGURE 3

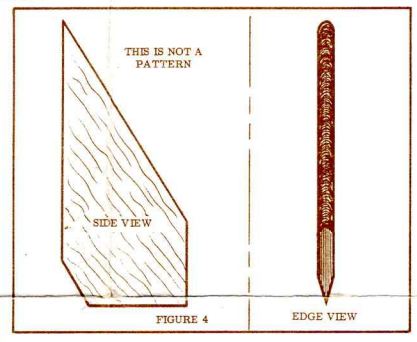

FIGURE 4

RIGGING PARACHUTE & SHOCK CORD

Cut four 10" lengths of shroud material. Lay chute plastic flat and attach one shroud to each corner with a tape disc. Draw up the other shroud ends even and tie tightly together.

Attach shock cord to body tube and nose cone as shown in Fig. 6. Tie loose shroud ends to shock cord.

LAUNCHING LUG

With fine sandpaper, sand one side of the launching lug to roughen surface. Glue the lug to the body tube in the position shown in Fig. 6.

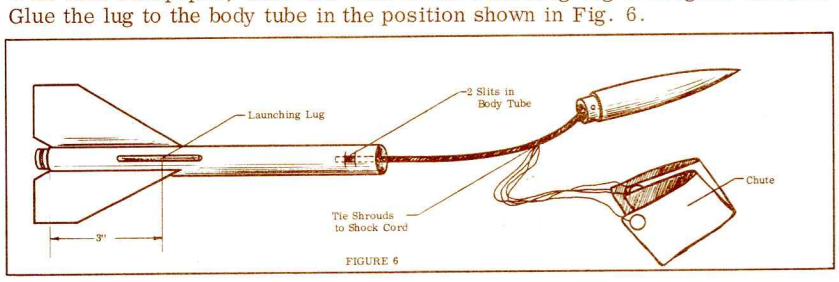

FIGURE 6

FINISHING

Fold the chute temporarily and insert into top of body tube. Complete chute folding instructions are included with the Centuri rocket engines. Place the nose cone on the body tube end and the rocket is now ready for finishing. A spray can type laquer gives the best finish and dries rapidly. Balsa fins and hardwood cone will require more than one coat of paint for a glossy finish, which is necessary for maximum altitude flights. Use bright colors such as white, yellow, orange, or red. Black is also good for high visibility against a blue sky.

SINGLE STAGE CAPABILITIES

The Black Widow sustainer (second stage) makes an excellent single stage rocket by itself. Complete engine mounting and ignition instructions are outlined in the Engine Operating Instructions which are supplied with all Centuri model rocket engines.

You are now ready to proceed to the booster or first stage assembly.

BOOSTER ASSEMBLY INSTRUCTIONS

The Gliding Booster recovery system uses no moveable surfaces, but instead depends on a delicate weight balance. Follow these instructions carefully and be as exacting as possible.

To assemble the booster stage, the following parts are needed:

PART NO.	PART NAME
11	Booster Body Tube
12	Bulkhead
13	Balsa Fin Mat'l
14	Trimming Bulkheads

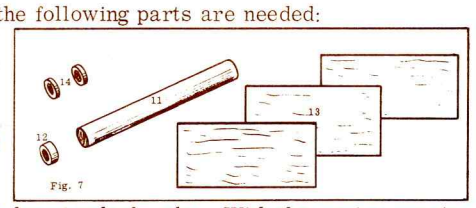

Fig. 7

POSITIONING BULKHEAD

Insert bulkhead into one end of the booster body tube. With the engine spacing tube, position bulkhead so that exactly 1/2" of the spacing tube extends beyond the end of the body tube. See Fig. 8. This positioning must be very exact as it determines the delicate balance which permits a smooth glide. Glue bulkhead in place as before, by dripping several drops of glue into the top of body tube, aiming at the joint between bulkhead and body tube. Again, be careful not to glue the engine spacing tube in the body tube. Allow the glue to dry before proceeding.

SETTING THE STABILIZER FINS

The Gliding Booster uses three stabilizing fins which are identical in shape. For purposes of discussion, we shall refer to them as the "wing" fins and the "rudder" fin.

Place the engine end of the body tube in the center of the circle of Fig. 9. Just as before, mark the fin locations with a pencil.

Next, cut out 3 fins from the 1/16" balsa stock using the pattern in Fig. 10. Again, make sure that the balsa grain is running in the direction shown. Do not sand the fin edges.

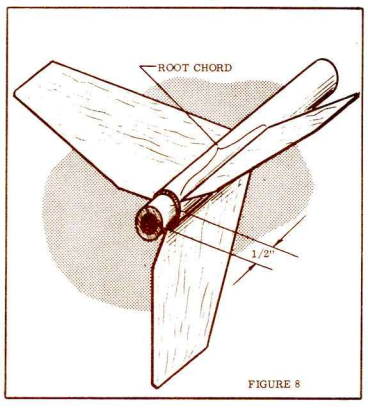

FIGURE 8

Apply fast drying model cement or glue to each fin root chord edge, one at a time, and also along the body tube where the fin is to be attached. When the cement has just begun to set, place the fin in position along body tube. Repeat for all three fins. Before glue has set, adjust the fins so that they are angled according to the diagram in Fig. 9. Make sure that the root chord is alligned with the long axis of the body tube. As glue is setting, check occasionally to see that the angles between the fins remain the same as in Fig. 9. When the initial glueing has thoroughly dried, run a bead of glue along all fin-body joints.

TRIMMING THE GLIDE

It is possible to check the gliding characteristics before actual flight using the following proceedure:

1) Insert an expended B.8-0, B.8-4, or B.8-6 engine casing with nozzle into the booster vehicle so that it contacts the bulkhead.

2) Hold the rudder fin as shown in Fig. 11, with finger on engine nozzle, and give a straight forward push, releasing it at arms length. Try this several times, preferrably from a high place such as a porch or roof top. The Booster should glide level if properly balanced.

3) If the vehicle appears nose heavy, pull the expended engine casing and insert one trimming bulkhead. Replace the engine casing and repeat step 2 above. You may find it necessary to insert a second trimming bulkhead.

4) Should the vehicle appear tail heavy or have no stability at all, try glueing one or two BB shot to the inside of the forward end of the body tube.

Remember, that the glide depends on balance, and a smooth glide can be attained by shifting weight forward or rearward.

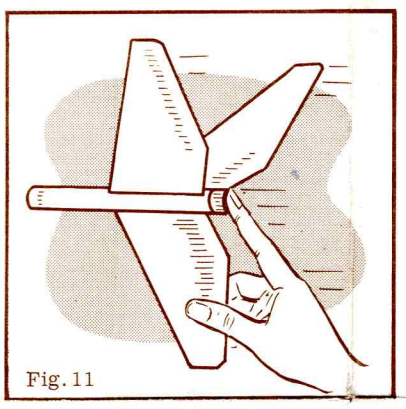
Fig. 11

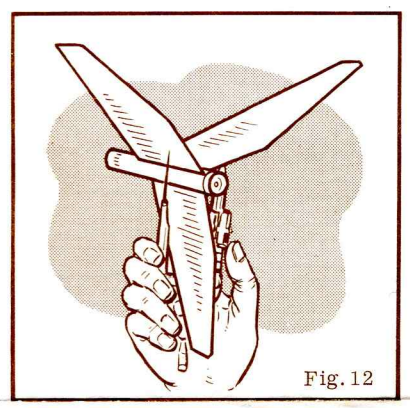
Fig. 12

BOOSTER-SUSTAINER STAGING

Insert the second stage engine into the sustainer tube. This fit should be tight, so as to prevent rearward jettisoning of engine when the engine ejection ignites. See engine operating instructions for complete mounting instructions.

Slip forward end of the booster body over the second stage engine. This slip connection should be just loose enough so that the engine will slip out without binding.

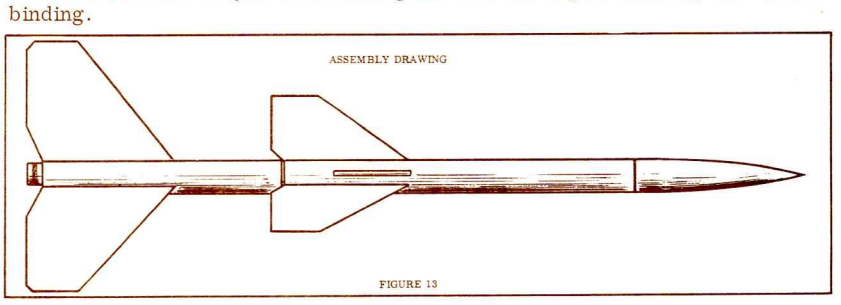

FIGURE 13

LAUNCHING

The Gliding Booster is designed for use with the B.8-0 model rocket engine. Do not use the B3-0 engine as it will strip the booster fins off clean upon take-off. The booster engine should fit tight enough so that it does not slip out during the powered or glide phase of flight. To assure a proper glide, the booster engine must be retained.

The Black Widow sustainer may be operated with any of the following engines:

1/2A.8-4 A.8-4 B.8-6 B3-5

Maximum altitude is achieved using the B.8-6 engine.

Launch the Black Widow from a 1/8" diameter x 36" long launching rod and ignite the booster engine electrically, as described in the Engine Operating Instructions. The second stage engine will auto-ignite from the hot burn-out gases from the booster engine.

After the first flight, you may wish to re-trim the booster for a better glide. Observe the initial glide angle and adjust accordingly.

For further information concerning rocket engines, kits, firing panels, or launching apparatus, write to:

Centuri Engineering Co.