Centuri

MAGNUM-D Jayhawk

This model is an accurate 1/5 scale model of the Navy version of the AQM-37A target drone. The AQM-37A is used in all branches of the service and each gives it its own "working name". The Navy has called theirs the Jayhawk.

Centuri's designers chose the materials used in this kit for two reasons: by using paper and balsa instead of molded plastic for detailing, it provides a challenge for the modeler and holds down the purchase price of the kit.

The airframe and markings are very accurate on the entire model except for some subtle differences in the nose cone. The AQM-37A when finished according to the instructions is an excellent model for scale competition. The scale data booklet included with the kit gives accurate detailed information about the real AQM-37A.



CONTENTS

Exploded View. 4,5
Assembly. 2,3,6,7
Decals. 8
Recovery System. 4
Flying Instructions. 4

CENTURI Engineering Co., Inc., P.O. Box 1988, Phoenix, AZ 85001



The Centuri JAYHAWK was developed with the help of two leading NAR rocketeers: Chris Pocock (left) and Doug Frost (right). Chris and Doug are widely regarded as the country's most expert Jayhawk scale modelers, having won many regional and national rocketry awards. Their research, scale data and field-testing helped our engineers make this great kit even better.

MODEL ROCKETEER'S SAFETY CODE

CONSTRUCTION
My model rockets will be made of only lightweight materials such as paper, wood, plastic, and thin metallic foils, with the exception of payloads and engine holders made of wirelike material.

ENGINES
I will use only pre-loaded factory made model rocket engines in the manner recommended by the manufacturer. I will not change in any way nor attempt to reload these engines.

RECOVERY
I will always use a recovery system in my model rockets that will return them safely to the ground so that they may be flown again.

WEIGHT LIMITS
My model rocket will weigh no more than 453 grams (16 oz.) at liftoff, and the engines will contain no more than 113 grams (4 oz.) of propellant, as prescribed by Federal Regulations.

STABILITY
I will check the stability of my model rockets before their first flight except when launching models of already proven stability.

LAUNCHING SYSTEM
The system I use to launch my rockets will be remotely controlled and electrically operated, and will contain a switch that will return to "off" when released. I will remain at least 15 feet away from any rocket that is being launched.

LAUNCH SAFETY
I will not let anyone approach a model rocket on a launcher until I have made sure that either the safety interlock key has been removed or the battery has been disconnected from my launcher.

FLYING CONDITIONS
I will not launch my model rocket in high winds, near buildings, power lines, tall trees, low flying aircraft or under any conditions which might be dangerous to people or property.

LAUNCH AREA
My model rockets will always be launched from a cleared area, free of any easy to burn materials, and I will only use non-flammable recovery wadding in my rockets.

BLAST DEFLECTOR
My launcher will have a blast deflector device to prevent the engine exhaust from hitting the ground directly.

LAUNCH ROD
To prevent accidental eye injury I will always place the launcher so the end of the rod is above eye level or cap the end of the rod with my hand when approaching it. I will never place my head or body over the launching rod. When my launcher is not in use I will always store it so that the launch rod it not in an upright position.

POWER LINES
I will never attempt to recover my rocket from a power line or other dangerous places.

LAUNCH TARGETS AND ANGLE
I will not launch rockets so their flight path will carry them against targets on the ground, and will never use an explosive warhead nor a payload that is intended to be flammable. My launching device will always be pointed within 30 degrees of vertical.

PRE-LAUNCH TEST
When conducting research activities with unproven designs or methods, I will, when possible, determine their reliability through pre-launch tests. I will conduct launchings of unproven designs in complete isolation from persons not participating in the actual launching.

Printed in U.S.A. #81627

HOW IT WORKS

Your Jayhawk model rocket is designed to fly in the same manner as other model rocket kits. The electrically ignited engine provides the power to boost the rocket to peak altitude. The rocket is guided off the launcher by two launch lugs. At peak altitude the engine's ejection charge is activated to eject the parachutes for recovery. The Jayhawk returns to Earth ready for another flight.

WHAT IT TAKES TO FLY

You will need engines, igniters, an electrical launch system and a 3/16" DIAMETER LAUNCH ROD to launch your Jayhawk. These supplies are not included in individual rocket kits. Engines, igniters, and launch systems are included in every Centuri Starter Set or Rocket Outfit. A 3/16" launch rod is available from your local Centuri retailer or direct from Centuri.



We recommend the use of Magnum D engines; each package includes the famous "Sure-Shot II" igniters, acclaimed as the world's most reliable model rocket igniter.

The popular Centuri Power Tower launch stand and Powr-Control launch system are ideal for launching your Jayhawk. In addition, they can be used to launch any other kit Centuri makes.

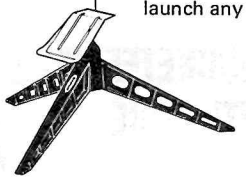

Always use standard remote-control electrical ignition and follow the engine recommendations. Be sure to comply with any laws that may apply in your area, for the good of Model Rocketry and your own enjoyment.

RIGHT MATERIALS FOR THE JOB

Different model rocket kits are made out of a variety of materials, depending on the needs of each kit. The chart below explains why this particular kit is designed using certain materials.

PART	REQUIREMENTS	MATERIAL
Body & Fins	• Light Weight • Strength	Balsa & Paper
Nose Cone	• Strength	Plastic

TOOLS YOU WILL NEED

In addition to the parts supplied, you will need the following tools to assemble and finish this kit.



BEFORE YOU START

If you are new to model rocketry, here are some general tips to get you off to a good start.

- Choose a practical assembly area: well lighted, big enough to work in, and out of the way of relatives or pets who might accidentally mess up your work.
- Cover your worktable with plywood or heavy cardboard to protect the table from glue, paint, cuts, etc.
- Remove the entire contents of your kit package carefully to avoid losing or damaging small parts. Lay them out neatly and identify each by referring to the "exploded view" drawing on this instruction.
- NOTE: Sometimes certain parts are packed INSIDE of other parts, such as tape discs inside parachutes, decals or couplers inside body tubes, etc.

ASSEMBLY INSTRUCTIONS

You MUST follow these instructions for satisfactory flights. The shape and placement of the model's parts has been carefully engineered for safe flights. DO NOT try to change the design, "customize" it, or leave off any parts.

1 To assemble the paper boat-tail (shiny side out), pre-curl the paper by gently pulling up from under a ruler on a clean, flat surface. Note the little tick marks on one end for aligning overlap. Form into a cone and apply glue opposite the overlap area. Line up the edge of the paper with the tick marks exactly and press together on a flat surface. Wipe away excess glue.

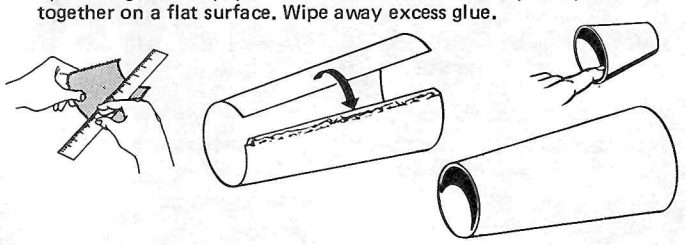

2 Locate the clay weight, 1/8 inch dowel and the nose cone. Form clay into thin "worms" and insert one into the open end of the nose cone. Use only one end of the wooden dowel to tamp the clay into the front of the nose cone as far as possible. Tamp all the clay "worms" into the nose cone in this manner.

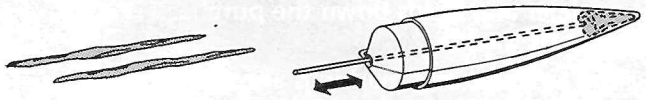

3 Stand boat-tail on end with smaller opening facing down. Drop the smaller die-cut ring from thick die-cut sheet into boat-tail. Tamp gently into place so ring is flush with edge of boat-tail. THIS IS VERY IMPORTANT!—Make sure tick mark is lined up with seam on boat-tail. After you are sure of proper alignment, apply a fillet of glue along inside seam of ring/boat-tail.

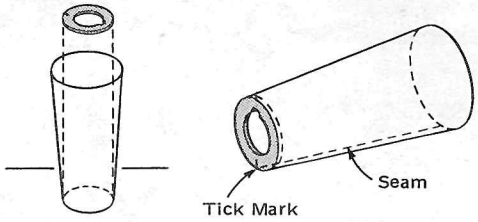

4 Locate 2 of the 3 identical centering rings from the thick die-cut sheet and one of the tube couplers. Glue one ring to the end of the coupler making sure it is flush all the way around. Repeat with 2nd ring on the other end.

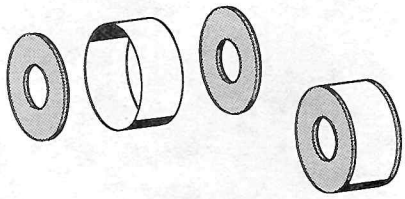

5 Place a bead of glue on the inside of the stuffer tube about 2" from the end of the tube. Insert thrust ring into end of tube. Using the engine spacing tube push the thrust ring into the tube until 1/4" of spacing tube remains showing. Remove spacing tube quickly before glue sets.

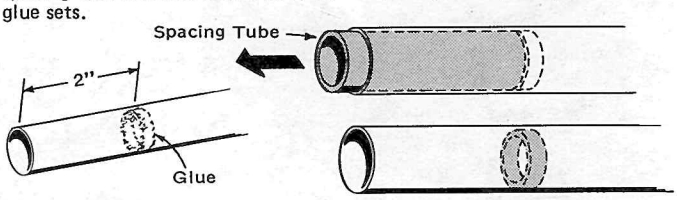

6 Mark stuffer tube 2-1/2" from end. With a sharp hobby knife make a 1/8" wide slit. Bend the engine lock slightly and insert one end into slit as shown. Lift engine lock slightly and run a bead of glue underneath it. Lay lock back down into glue and wrap a piece of masking tape around entire tube as shown.

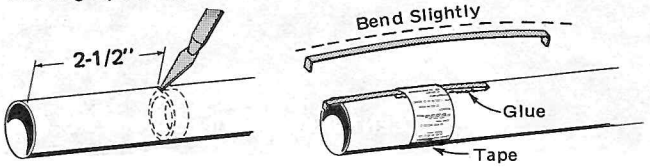

7 Slide boat-tail onto stuffer tube from forward end. Slide tube coupler assembly onto stuffer tube and test fit into the boat-tail. Slide back, place a ring of glue just inside edge of boat-tail and slide tube coupler back into place. Place boat-tail on edge of desk top with engine lock overlapping. Slide stuffer tube until end of tube is flush with rear of boat-tail. Apply ring of glue around boat-tail/stuffer tube joint.

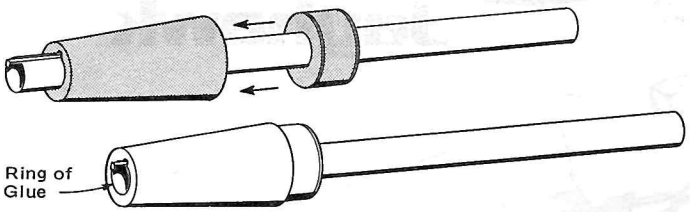

8 Glue the 3rd remaining identical ring to tube coupler making sure ring is flush with edge of coupler. Mark coupler 1/2" from edge. Run a line of glue along the inside edge of one of the main body tubes. Carefully insert coupler into tube up to mark. Apply glue line along inside edge of 2nd half of main body tube and join 2 halves together. Roll entire tube along a flat surface to be sure the tube halves are joined straight.

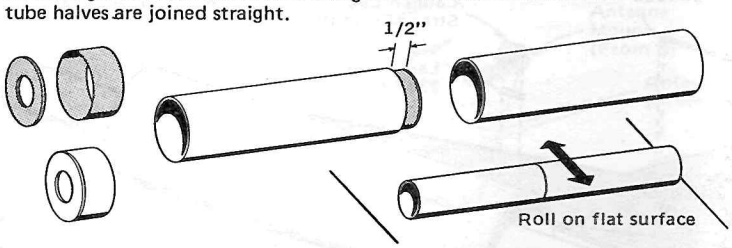

9 Stand main body tube on end and place on fin guide. Mark tube at all positions shown. Find a convenient groove or channel such as a door jamb or open drawer. Very carefully extend all marks down entire length of tube making sure they are straight.

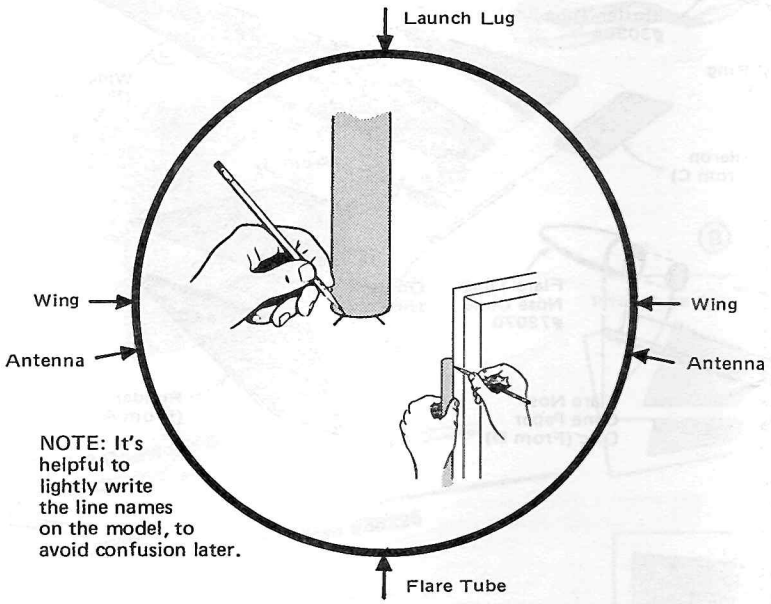

10 Test fit boat-tail/stuffer tube assembly into main body tube. Align seam of boat-tail with flare tube line. Remove assembly part way, apply glue along inside edge of main tube and push assembly back in place. Make sure boat-tail seam is aligned with flare tube line.

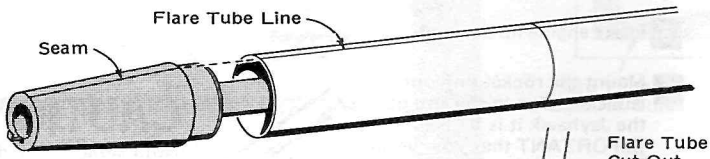

11 Remove nose cone shape from flare tube cut-out guide. Tape guide to front end of main body tube making sure forward edge is flush with front of main body tube. Trace along inside of nose cone cut-out with a ball point pen. Remove guide. Using a sharp modeling knife, cut along the lines you've just drawn and remove cut piece.

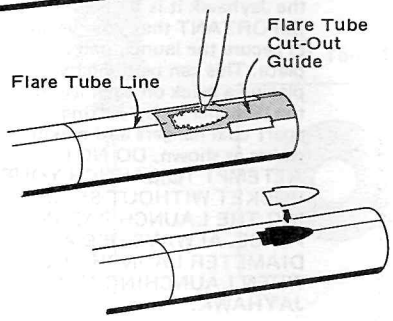

12 Carefully remove balsa wing sections from die-cut sheet. Holding identical sections together, sand all edges with a sanding block or on a piece of sandpaper on a flat surface. Lay a piece of waxed paper on a flat surface and glue wing sections together as shown. Repeat this procedure for rudders.

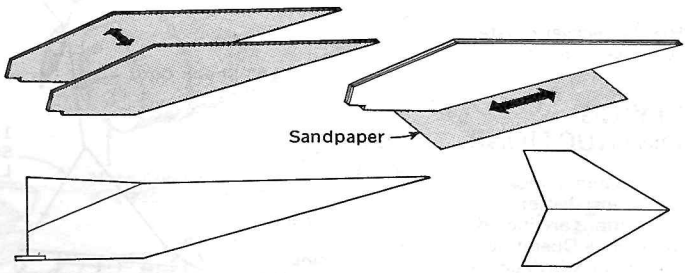

13 Remove flare tube inner support pieces from thick die-cut sheet. Glue pieces together as shown.

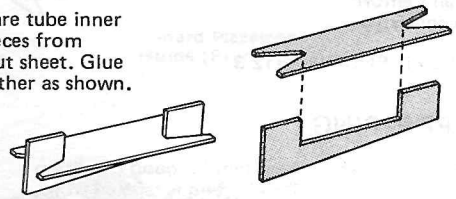

14 Remove flare shroud plate from thin die-cut sheet. Apply a thin film of glue on back side (dull) and glue into position on boat-tail using tick marks and boat-tail seam for alignment. Be sure plate is set back 1/4" from rear edge of boat-tail.

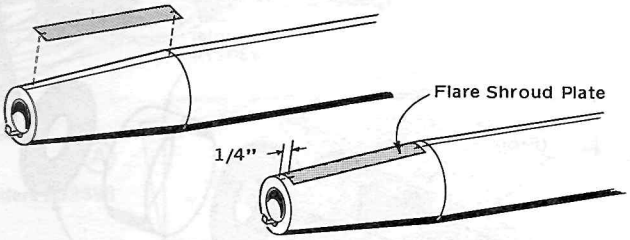

15 Stand flare tube on the guide below and place two marks where the arrows indicate. Find a convenient groove or channel such as a door jamb or open drawer. Very carefully extend marks down entire length of flare tube, making sure they are straight on tube. Using a single edge razor blade, carefully make a light scribe down line by pulling razor towards you slowly. Repeat with several light scribes until you cut through tube. DO NOT ATTEMPT TO MAKE CUT IN ONE STROKE. Repeat this procedure along remaining line. You will end up with 2 halves, only one will be used in this kit.

Note: When cutting tube NEVER place hands or fingers in front of path of razor blade.

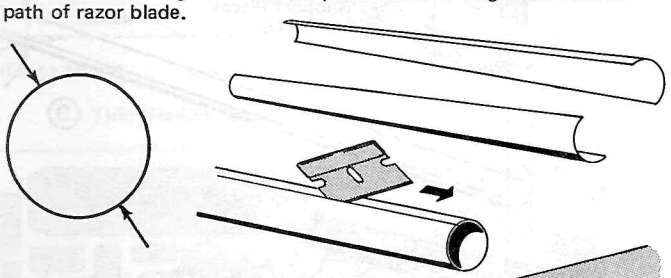

16 Glue flare tube inner support piece into one end of flare tube with edge flush with edge of flare tube.

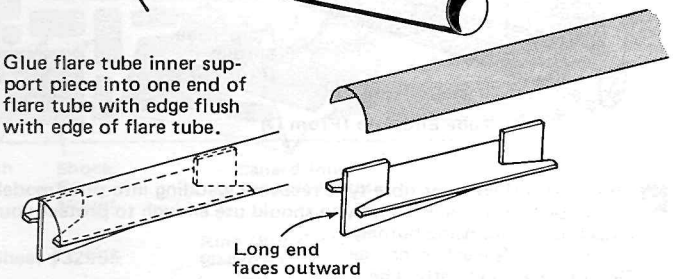

17 Locate the flare nose cone paper disc from the thick die-cut sheet. Using epoxy or Ambroid cement, glue flare nose cone paper disc into base of cone as shown. Glue entire nose cone into flare tube.

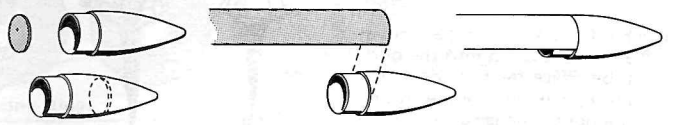

NOTE: ASSEMBLY CONTINUED ON PAGE 6

RIGGING THE RECOVERY SYSTEM

Assemble the two parachute kits enclosed, following the instructions printed right on the chute material. Save the left over shroud line for the next step.

Rig the recovery system as shown at right.

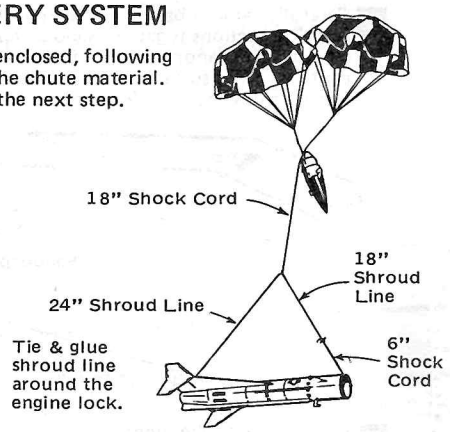

FLYING INSTRUCTIONS

Igniters and complete engine installation instructions are included in "Engine Operating Instructions" which accompany all Centuri Magnum-D engines.

RECOMMENDED ENGINE: D12-3

Exploded

Centuri MAGNUM-D™ Jayhawk

FLIGHT PREPPING

1 Inspect the entire recovery system for good condition before each flight. If recovery system is tangled from last flight, untangle by cutting it apart and then reattach.

(Remaining steps below Exploded View).

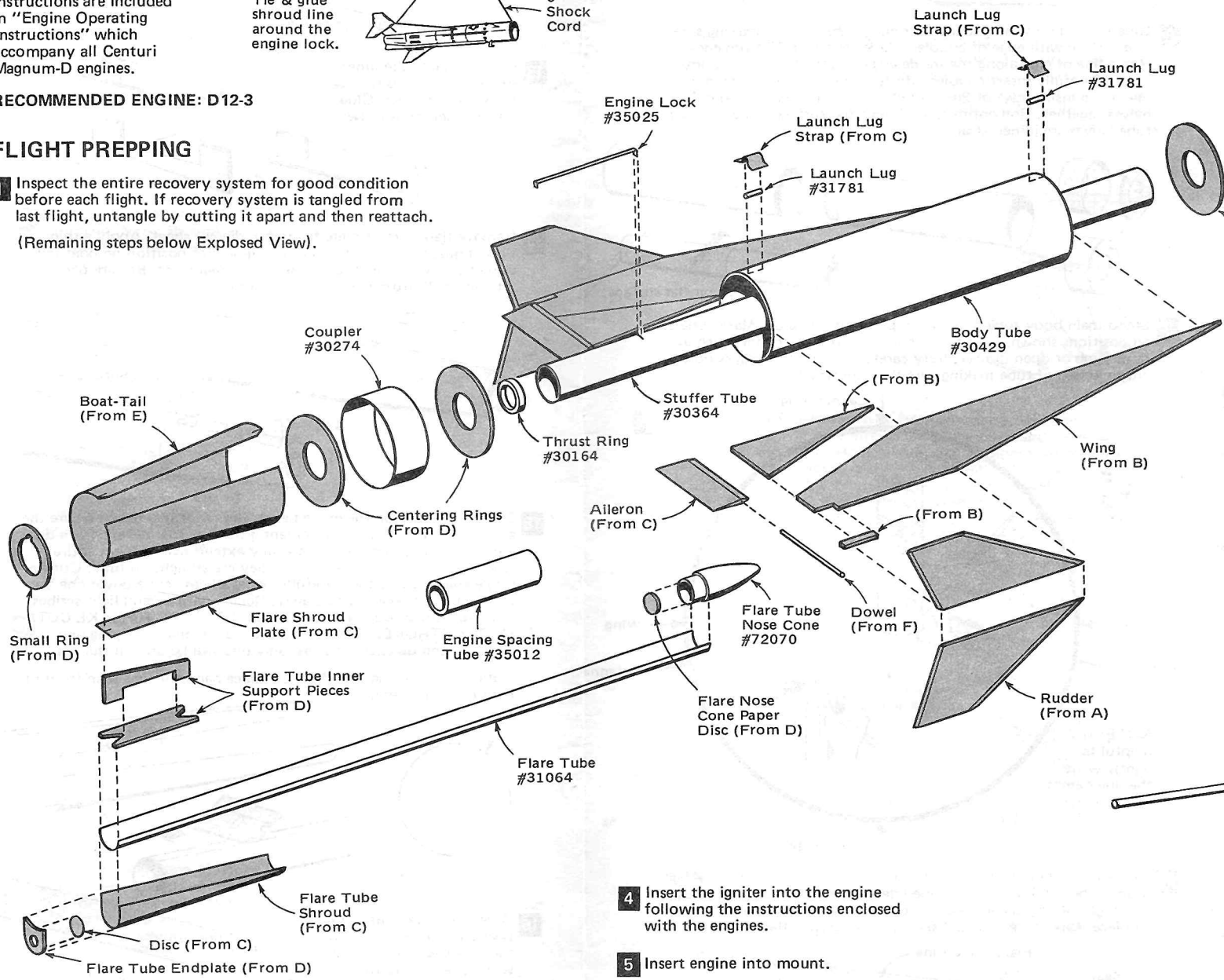

2 Insert Centuri crepe or fibre type recovery wadding into your model. This should be loosely packed and you should use enough to protect your parachutes from being burned by the engine's ejection charge. Do not pack too lightly. Use 8 sheets of crepe wadding or a loosely packed 3" ball of fibre.

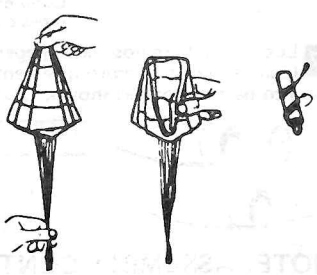

3 Fold the parachutes as shown and insert them into the body tube. Place the nose cone in place, making sure the fit of the nose cone is correct. It should fit snugly.

4 Insert the igniter into the engine following the instructions enclosed with the engines.

5 Insert engine into mount.

6 Mount the rocket on your launcher. Due to the size of the Jayhawk it is VERY IMPORTANT that you weight or secure the launch pad in place. This can be done by placing a brick on each leg of the launcher or by cutting apart coat hangers and making stakes as shown. DO NOT ATTEMPT TO LAUNCH YOUR ROCKET WITHOUT SECURING THE LAUNCH PAD IN PLACE. ALWAYS USE A 3/16" DIAMETER LAUNCH ROD WHEN LAUNCHING YOUR JAYHAWK.

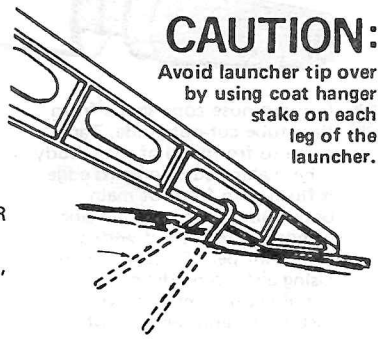

CAUTION:

Avoid launcher tip over by using coat hanger stake on each leg of the launcher.

View

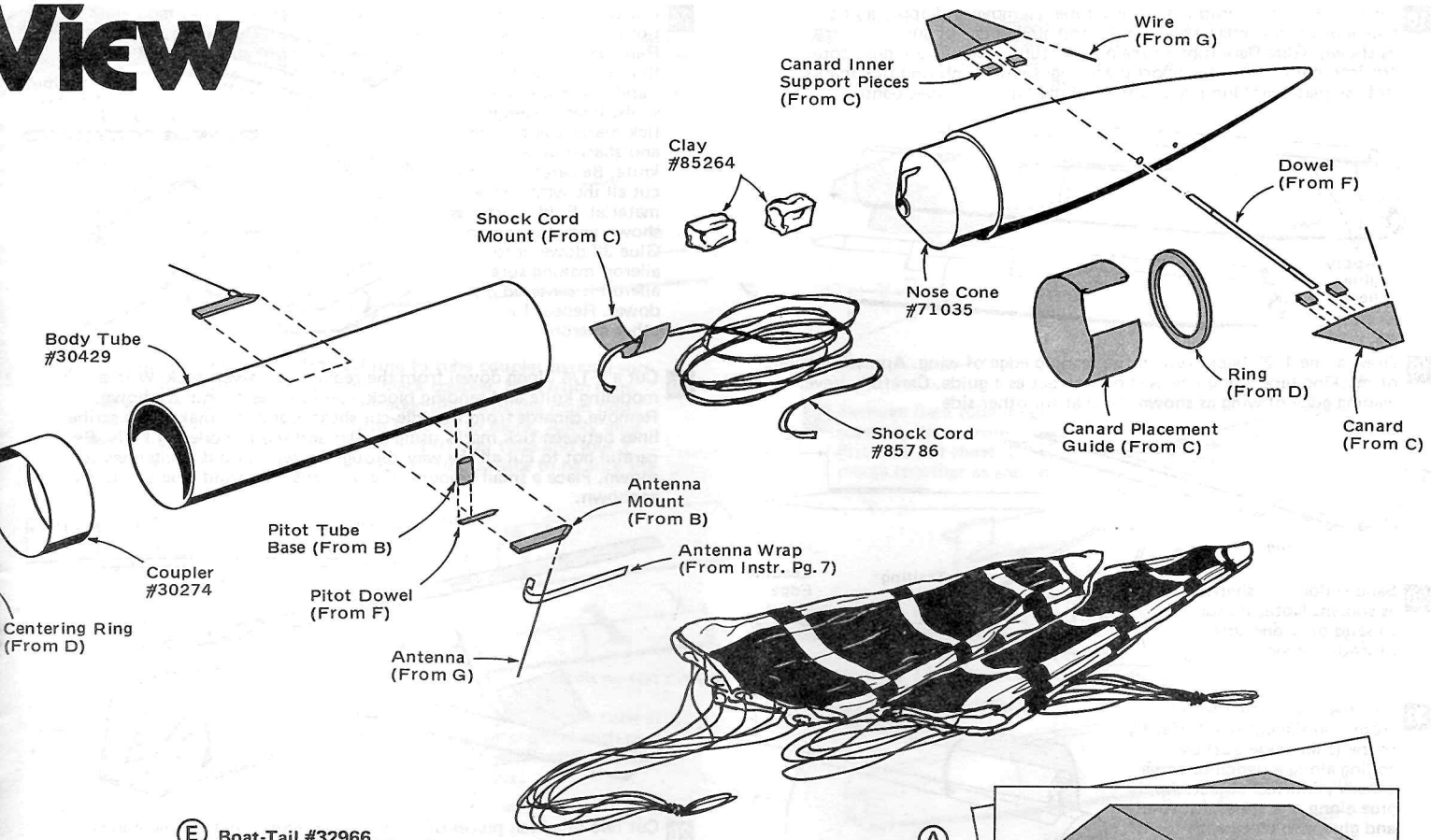

Ⓔ Boat-Tail #32966

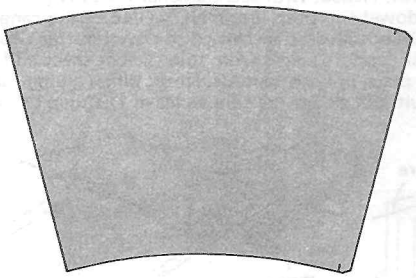

Ⓐ Rudders #32898

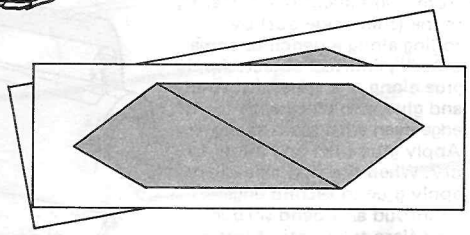

Ⓑ Wings #32899

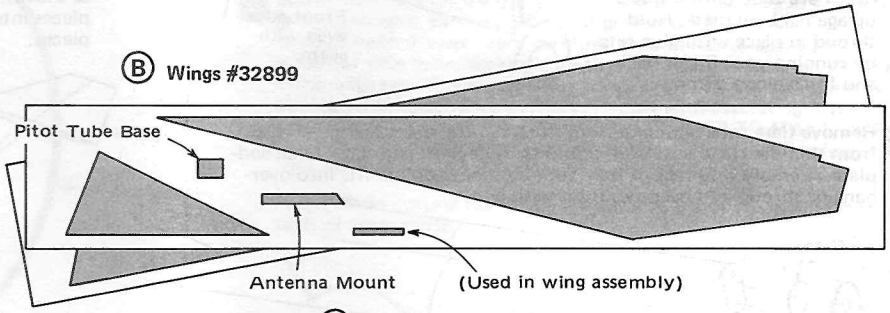

Ⓕ 1/8 Dowel #85901

Ⓖ Antenna Stock #38295

Ⓒ Thin Die-Cut Sheet #39264

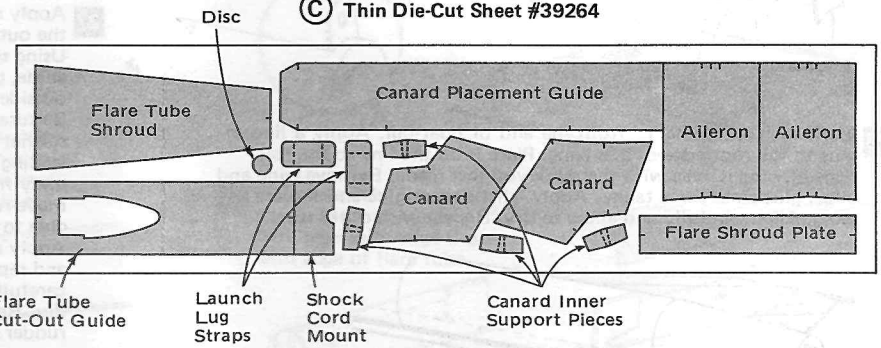



RECOMMENDED LAUNCH SYSTEM:

#5601 Power Tower Launch Stand
#5623 Powr-Control Controller
#5803 Heavy-Duty 3/16" Launch Rod
(Rod available by mail order for $1.75 plus $1.50 handling). May substitute 3/16" pianowire or welding rod.

Avoid eye injury by capping the exposed tip of the launch rod when not actually launching. Follow the instructions and the Safety Code, and have many happy hours with model Rocketry.

Ⓓ Thick Die-Cut Sheet #32965

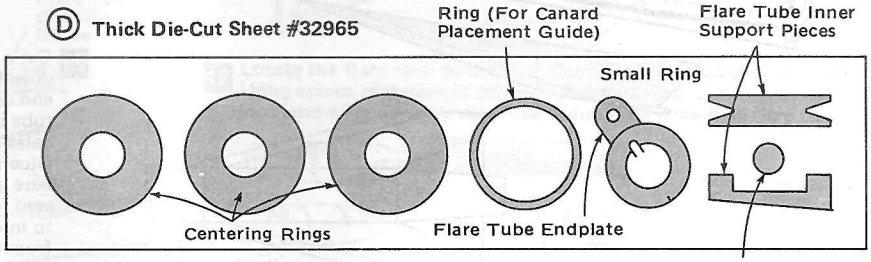

18 Test fit flare tube onto main body tube. Remove and apply a line of glue along inside edge of flare tube and along edge of support piece as shown. Glue flare tube to main body tube making sure nose cone fits into cut hole, and support piece aligns with centering tick marks or base plate. Hold in place with masking tape or rubber bands.

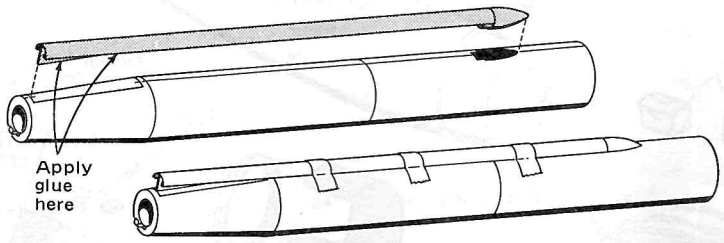

19 Draw a line 1/2" back from entire leading edge of wing. Apply 3-4 layers of masking tape along line as shown to act as a guide. Carefully bevel leading edge of wing as shown. Repeat for other side.

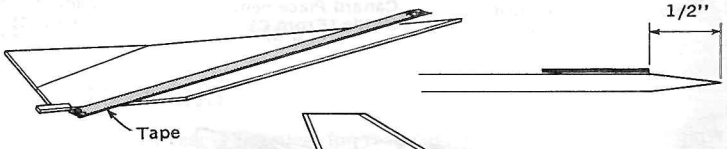

20 Sand rudders to shape as shown. Note: Be sure to sand only one side of leading edge.

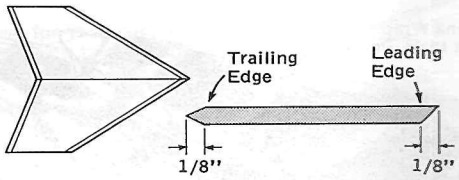

21 Remove flare tube shroud from thin die-cut sheet. Gently shape (shiny side out) by rolling along a pencil or some other cylindrical object. Apply glue along one edge of shroud and glue into place with front edge even with seam as shown. Apply glue fillet and allow to dry. When the first side is dry, apply glue to second edge of shroud and bend shroud over flare tube until it butts up against base plate. Hold shroud in place until glue sets by running your finger back and forth along seam.

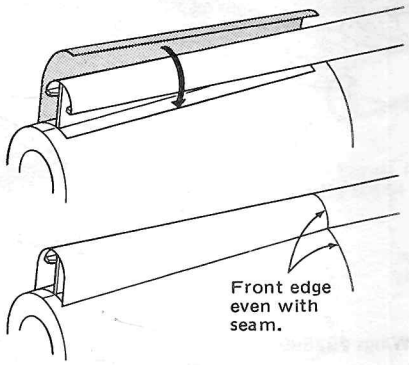

22 Remove flare tube endplate from thick die-cut sheet and small disc from thin die-cut sheet. Glue thin disc to back of endplate. Glue endplate assembly into rear of flare tube so that endplate fits into overhang of shroud and becomes flush with end.

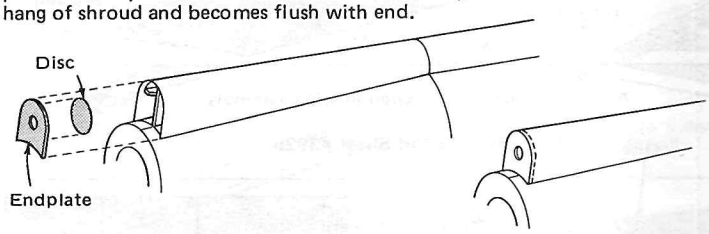

23 Mark each wing line 1" from the end of boat-tail. Apply a line of glue to the root edge of one wing. Place it on the line so the rear edge of wing is even with the mark you just made. Remove wing and allow glue to become tacky. Apply a little more glue and replace wing. Align carefully and allow to dry. Repeat with other wing.

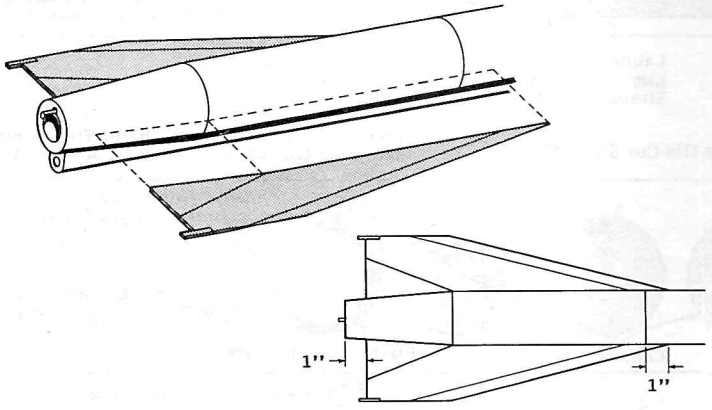

24 Cut two 3" long sections of 1/8" dowel. Remove ailerons from thin die-cut sheet. Carefully make light scribe lines between tick marks using a ruler and sharp modeling knife. Be careful not to cut all the way through material. Fold aileron as shown and glue together. Glue 3" dowel into aileron making sure aileron is centered on dowel. Repeat for other aileron.

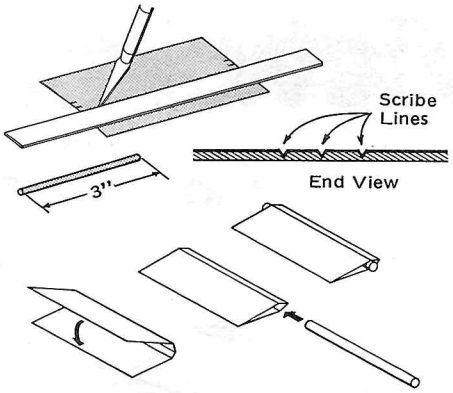

25 Cut a 5-1/4" long dowel from the remaining dowel stock. With a modeling knife and sanding block, carefully bevel ends as shown. Remove canards from thin die-cut sheet. Carefully make light scribe lines between tick marks using a ruler and sharp modeling knife. Be careful not to cut all the way through material. Fold along lines as shown. Place a small amount of glue along edges and glue together as shown.

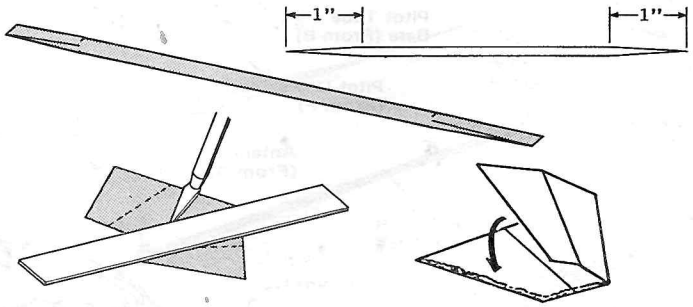

26 Cut two one inch pieces of wire from antenna stock. Using epoxy or Ambroid cement, glue into leading edge of canard (edge with fold) so that 1/8" sticks out. Repeat with second canard. Apply glue to one end of beveled dowel and push into ONLY ONE of the canards until its a snug fit. Do not glue other canard to dowel at this time! Remove canard inner support pieces from thin die-cut sheet and fold as shown. Glue into place in both canards. Note: When gluing support pieces into canard without dowel, be sure to leave 1/8" gap between pieces.

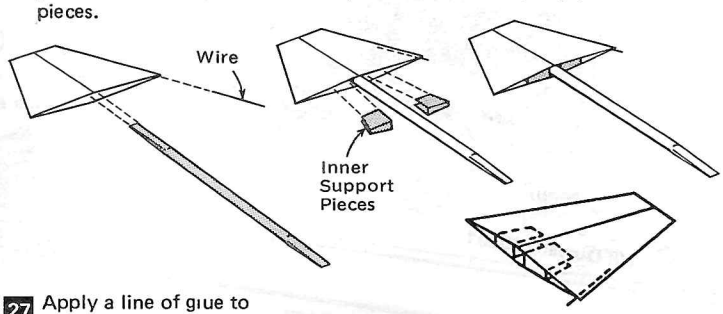

27 Apply a line of glue to the outside edge of wing. Using seam in balsa as guide, glue rudder onto outside edge of wing. Be sure to glue rudder so that the bevel on the leading edge is facing away from model. Remove rudder and allow glue to become tacky. Apply a little more glue and replace rudder. Align carefully and allow to dry. Repeat with other rudder.

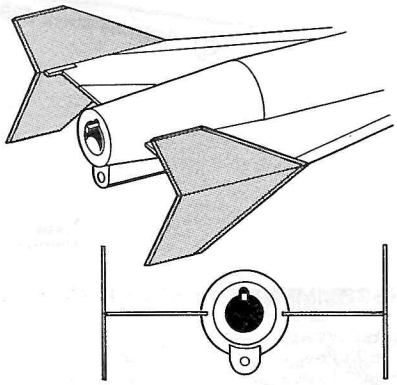

28 Cut a 1" long piece of 1/8" dowel from stock. Bevel one end as shown. Remove pitot tube base from thick die-cut balsa sheet and sand to shape. Glue dowel to pitot tube base as shown. As an optional step for strength you may wish to insert a short piece of wire from antenna stock into base as shown.

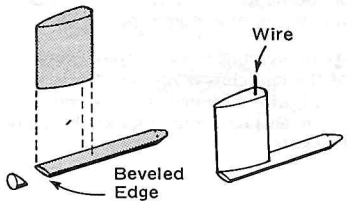

29 Remove antenna mounts from thick die-cut balsa sheet. Sand bevel into front edge as shown. With a push pin or sewing needle, carefully make a pilot hole at angle shown. Cut a 2-3/4" length antenna from wire stock. Cut antenna wraps (bottom of second column page 7) from instructions and glue to antenna as shown. Carefully insert antenna into pilot hole you just made and glue in place with epoxy or Ambroid cement. Repeat for second antenna.

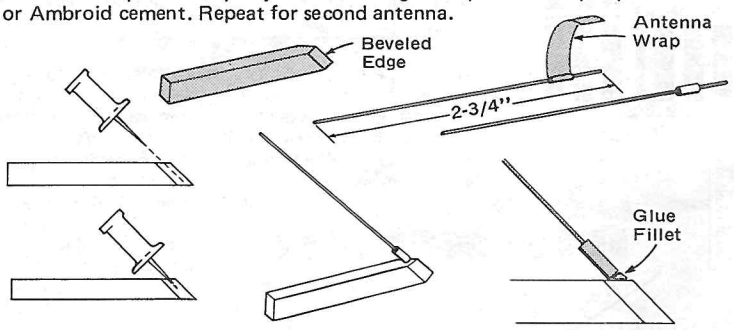

30 Test fit aileron into place as shown. If dowel is too long, sand each end until you get a snug fit. NOTE: Inside edge of aileron is angled to follow boat-tail. Apply glue to the ends of the dowel and along inside edge (angled) and position as shown. Be sure to align aileron straight with wing or model will not fly correctly. Repeat with other aileron.

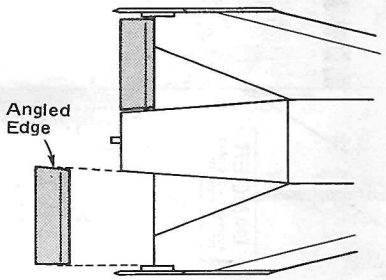

31 Mark flare tube line 3/4" from tip of flare tube nose cone. Apply glue to root edge of pitot tube and place on line so that rear of pitot tube is even with mark you just made. Remove pitot tube and allow glue to become tacky. Apply a little more glue and replace making sure of proper alignment.

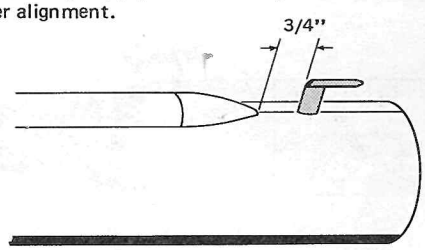

32 Mark antenna lines 3-1/4" from front edge of main body tube. Apply glue to root edge of antenna mount and place on line so front edge is even with mark you just made. Remove antenna mount, allow glue to become tacky. Apply a little more glue and replace antenna. See end view for proper alignment. Repeat for other antenna.

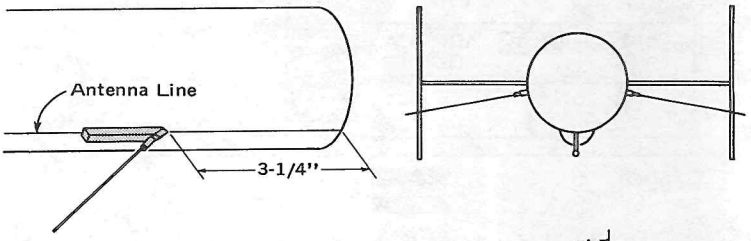

33 Mark the inch long launch lug at the midway point and cut with a sharp modeling knife by pressing on a hard surface. To fix crunching caused by cutting, simply place launch lug on end of pencil and rotate back and forth until round. Glue lugs onto main body along drawn line as shown. Remove launch lug straps from thin die-cut sheet and glue one over each lug as shown.

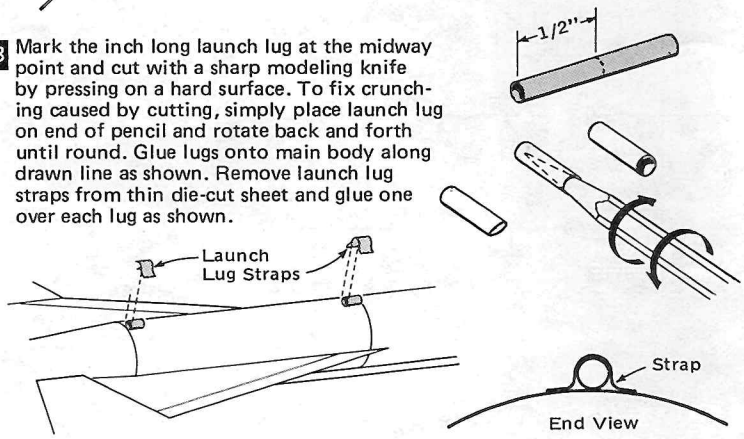

34 Remove canard placement guide from thin die-cut sheet and ring from thick sheet. Glue placement guide together using tick marks for proper alignment. Glue ring into the end that does NOT have the tick marks.

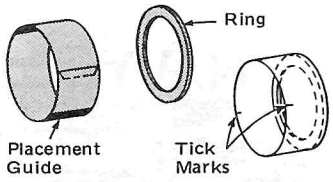

35 Slide canard placement guide onto nose cone and align tick marks with seam in plastic. Mark nose cone with pencil at both nicks (one on each side). Remove guide. Make a 1/8" hole (just wide enough for dowel to slip through) by rotating a sharp modeling knife back and forth as shown. Mark seam 1 inch forward of hole you just made. Like above, with a modeling knife, make another much smaller hole on the mark. Hole should be just large enough for wire to slip into. Repeat procedure for other side of nose cone.

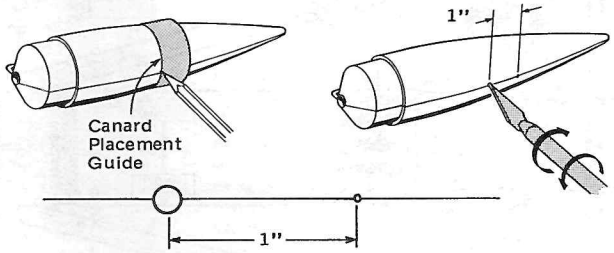

36 Locate the shock cord and mount. Tie the shock cord around the mount as shown. Apply glue to the mount and glue in place in forward end of main body tube at least 2 inches from end of tube. Tamp the mount firmly in place and allow to dry. Do not tie shock cord and nose cone at this time.

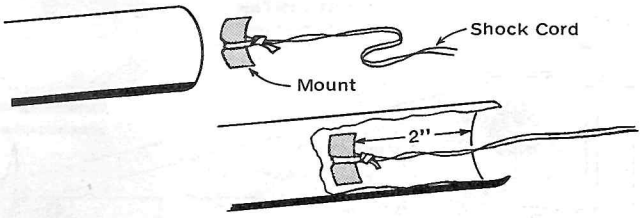

37 Apply a final set of fillets to all glue joints and allow to dry throughly before further handling.

38 Wash plastic nose cone in soapy warm water to remove any mold residue that might be left. This will keep paint from peeling during masking. Mask off base of nose cone and paint entire cone gloss black. After paint is thoroughly dry, slide canard placement guide back on nose cone. Wrap a piece of masking tape all the way around cone with 1/8" overlapping onto cone.



39 Place nose cone in front end of body tube and spray entire model with white primer. After primer dries, paint several light coats of orange over entire model and one final finish coat.

RECOMMENDED COLORS:
Krylon Mandarin Orange
Krylon Gloss Black

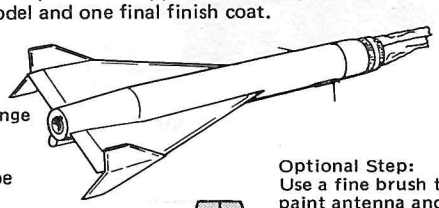

40 The canards should be painted orange, and done separately from rest of model. When paint is dry, slide the dowel/canard assembly through the 1/8" hole. Glue on the remaining canard by inserting the wire into the hole first as shown at right.

Optional Step: Use a fine brush to paint antenna and pitot tube silver.

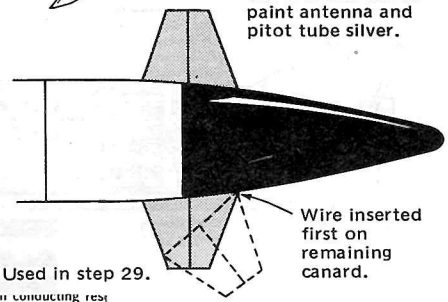

ANTENNA WRAPS: Used in step 29.

[redacted] When conducting rest methods, I will, when p pre-launch tests. I will

[redacted] Z 85001 Printed in U.S.

Decal #36863

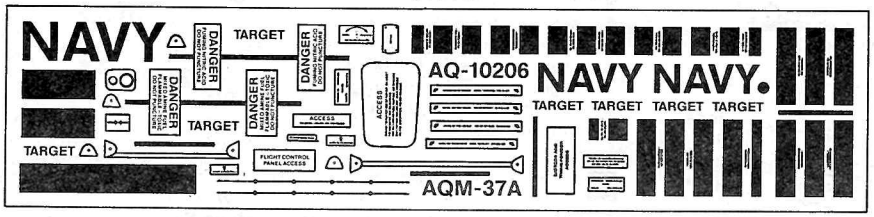

Decal #36862

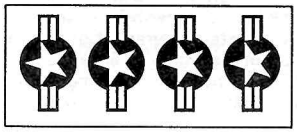

After the paint is dry apply the decals. Make sure surface is free of oil and dust. Cut each decal from sheet and dip in water for approximately 10 seconds. Hold decal by one end until it uncurls. Have surface wet for easy sliding into position. Slide decal from paper and blot dry with a tissue.

HINT: Apply largest decals first like the brown and black bands.

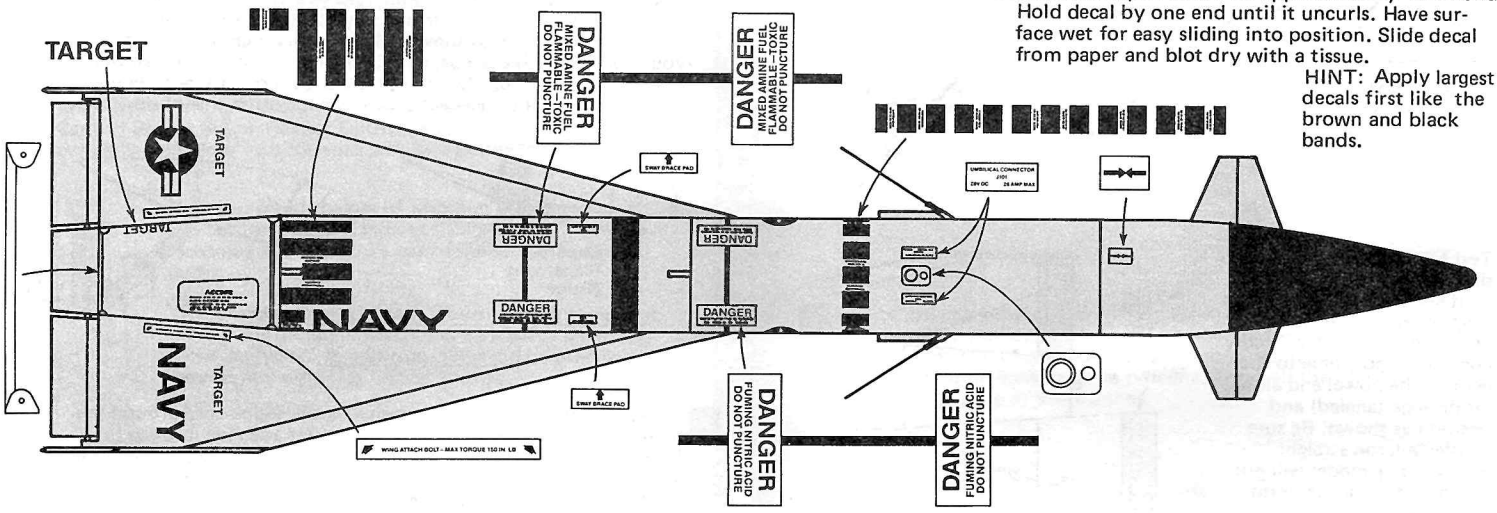

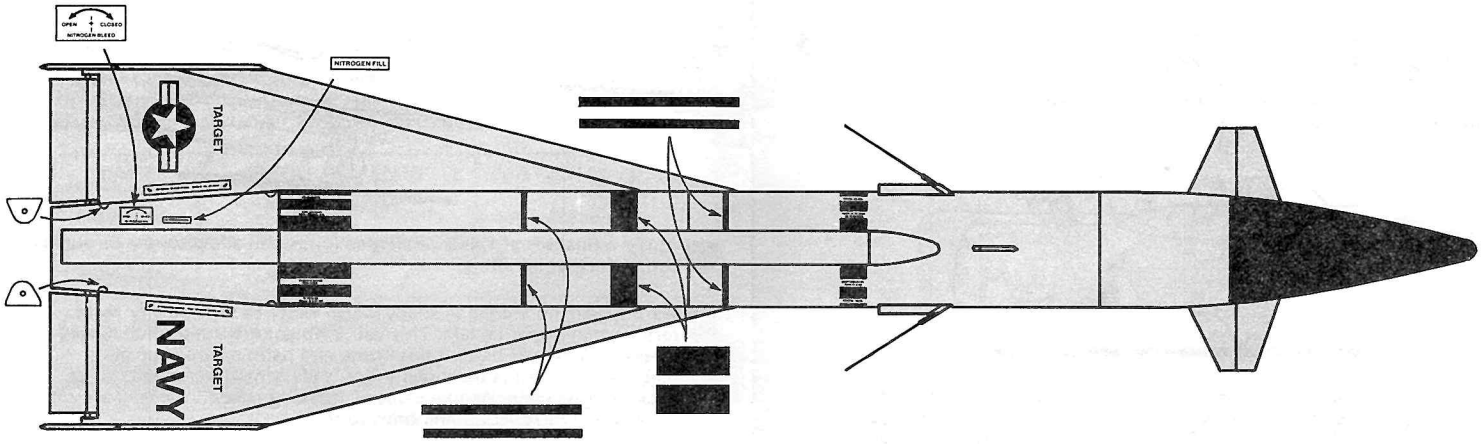

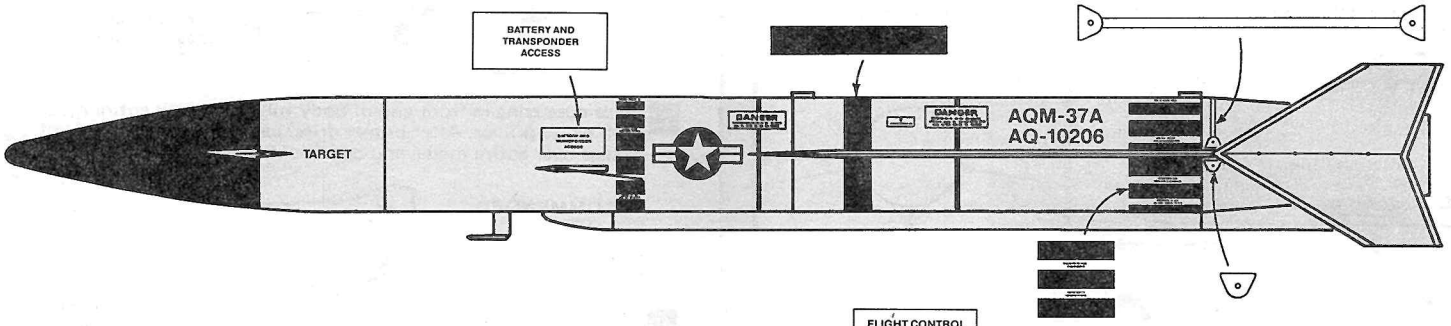

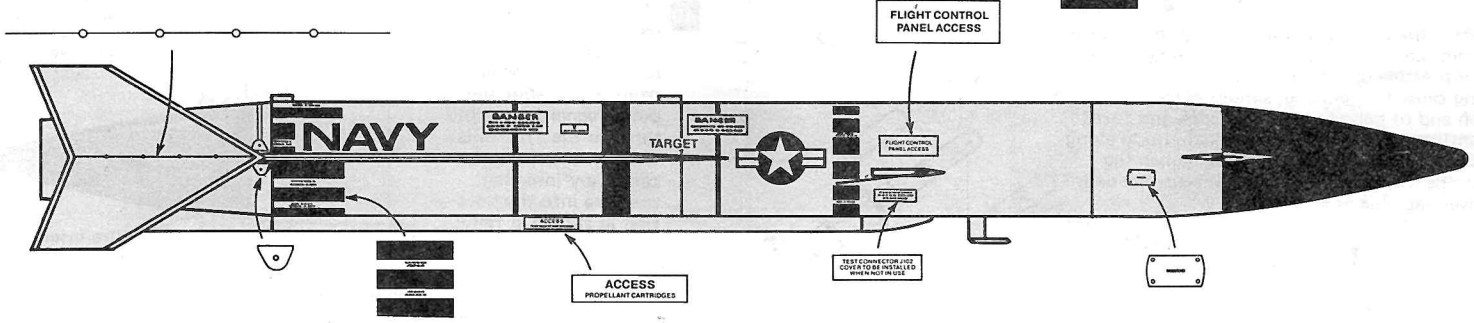

SEE PAGE 4 FOR RECOVER
AND FLYING INSTRUCTIONS