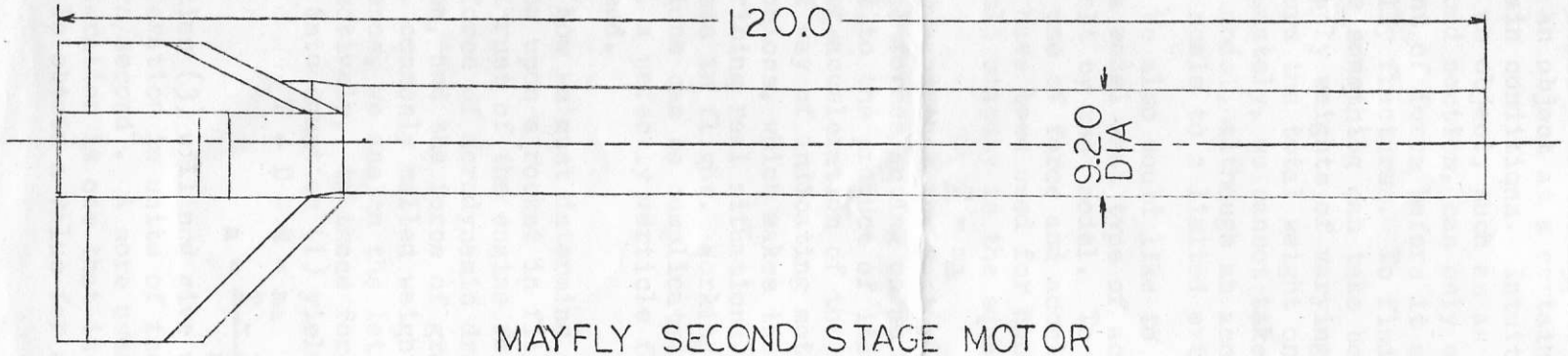

MAYFLY SECOND STAGE MOTOR

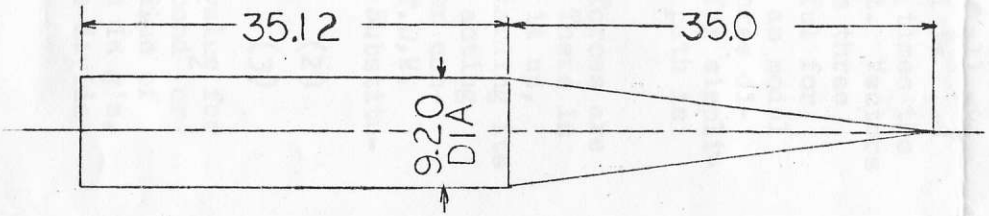

PAYLOAD SECTION

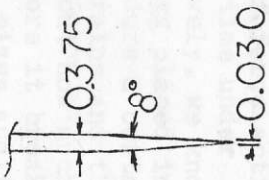

FRONT & REAR FIN EDGES

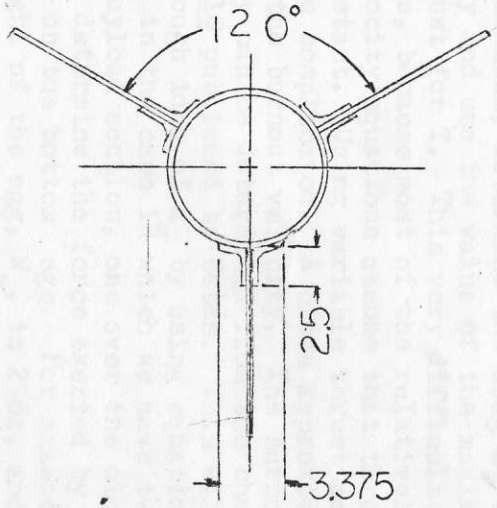

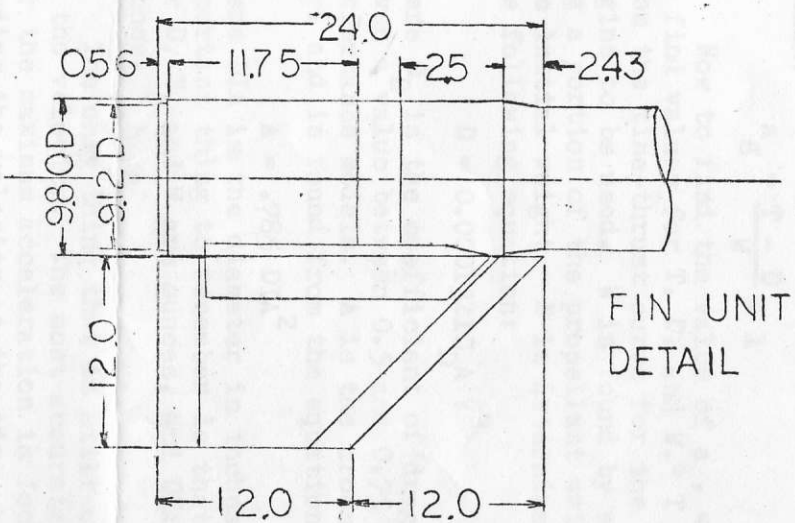

FIN UNIT DETAIL

AEOLUS SECOND STAGE	DRAWN BY: MICHAEL NOWAK	DATE 3-27-75	ALL OF THE ABOVE DATA WAS OBTAINED FROM WRE DRAWING ADSK3122

THIS DRAWING IS NOT TO BE USED FOR MAKING MODELS COMMERCIALLY