Cloning the Orange Bullet

By John Brohm - NAR #78048 **June 23, 2011**

Introduction

Estes Industries entered the model rocketry market with a series of mail order ads for model rocket engines; the ads initially placed in magazines like Popular Science and Popular Mechanics. The success of those ads led in turn to a parts catalog published in mid-1960, which featured a Plans Book (cat# 160-P-1) that depicted several models that could be crafted from the offered model rocket parts.

One of the models in the Plans Book was the Orange Bullet. The Orange Bullet was an original Estes design and was an important early step on the road that Estes Industries would take to become the dominant model rocket supply company.

The Orange Bullet embodied several key ideas that Vern Estes was experimenting with to develop a new method of model rocket recovery. Instead of ejecting a parachute or streamer at apogee, the Orange Bullet would eject the engine, and the consequential dynamic change in the location of the Center of Gravity relative to the model's Center of Pressure would convert the flying model from a stable attitude to an unstable one, bringing about a tumbling effect that would slow the model to a safe speed as it descended. Because the Orange Bullet was a feather-weight model, it would impact Earth without damage or ill-effect.

Vern Estes felt that this tumbling method of recovery was novel and filed a patent application to protect the idea on July 5, 1960; the US Patent Office agreed and granted Patent #3,114,317 to Mr. Estes on December 17, 1963.

Test flying the Orange Bullet quickly showed that the design was a winner (the Orange Bullet set an NAR altitude record in 1960), and so Estes Industries began producing parts for its mail order business. The body tube stock for the Orange Bullet was hand rolled by Gleda Estes, and this body tube type (listed in the 1960 Parts Catalog as BT-2) was the forerunner of the BT-3/BT-30 that would become the mainstay airframe for most of the early Estes kits. With a rapidly growing mail order parts business, Estes Industries soon saw the demand for model rocket kits; the Orange Bullet design was further refined for kit production and was introduced as Estes Industries' first kit, K-1, the Astron Scout, in the 1961 catalog.

Given its place in the hobby's history, I felt an example of the Orange Bullet should have a place in my fleet, so in this article, I'd like to share with you my attempt at cloning this model.

The Build

Figure 1 illustrates the original Orange Bullet plan.

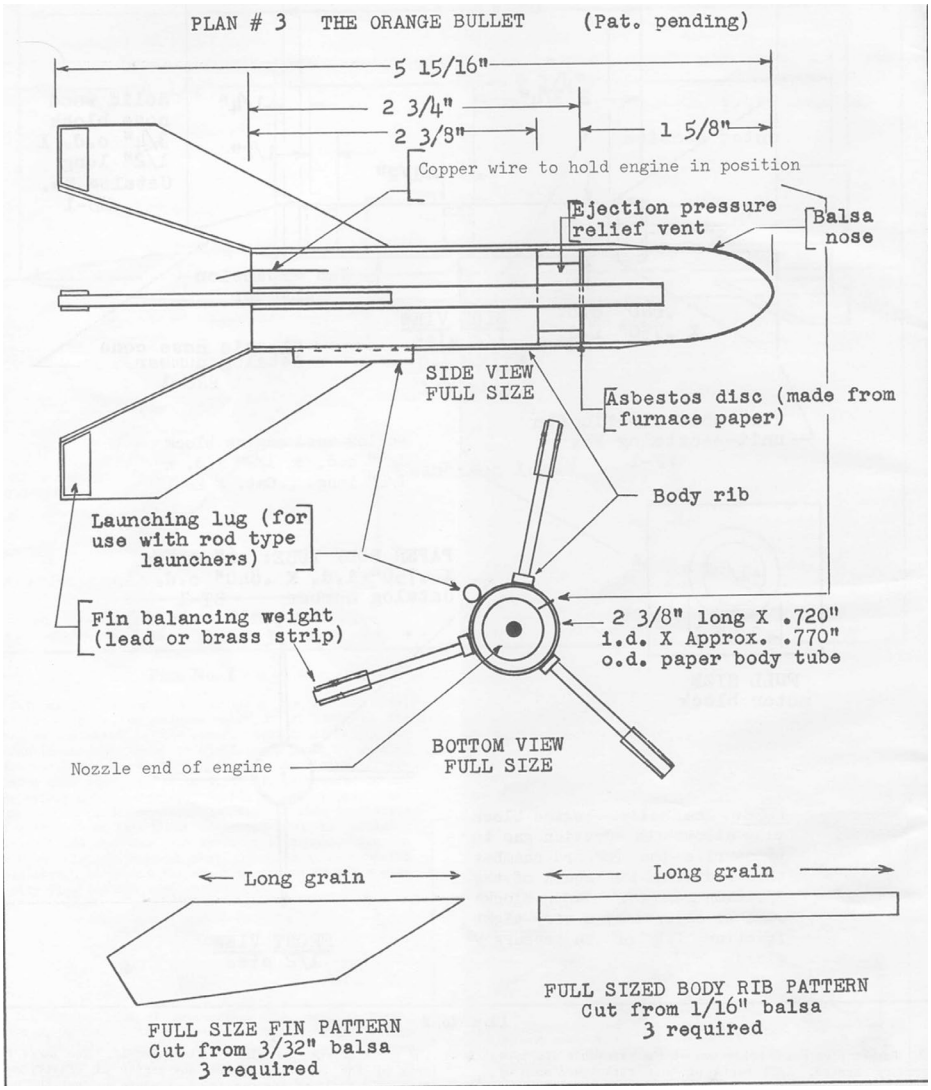

Figure 1: The Orange Bullet (figure not to scale)

The illustration in Figure 1 has been reduced from full size; you can find the full-size plan for the Orange Bullet in the Estes Rocketry Manual, located here:

http://www.ninfinger.org/rockets/catalogs/estes_techman/esttech.html

Before jumping into the build, a few words of caution about the Orange Bullet plan. First, scaling off the plan can be risky due to variations in scanner interpolation. In general, use the listed dimensions on the plan.

Caution is also the watchword when making the body ribs. In the Side View, the body rib is clearly much longer than 2-3/4" (scaling it suggests it should be 3-3/8"), but the "full size" body rib pattern shown in the lower right of the plan only measures out at a hair over 2-7/8". One must be careful here indeed!

So, for my clone, I chose to interpret the plan as follows:

- Airframe: BT-30, cut to the listed dimension in the plan.

- Nose cone: I used a BNC-30D, same as the Astron Scout. It's a very close match to the shape and size shown in the Orange Bullet plan (**note:** since this article was written, Semroc has since produced a specific Orange Bullet nose, P/N BNC-30DOB)

- Fins: I used the template provided in the lower left area of the plan. It seemed to match well with the depiction in the side view.

- Body Ribs: I used 1/16" thick x 3/16" wide strip balsa, as recommended, but cut to a length of 3-3/8". As mentioned earlier, this length seemed a good fit with the side view depiction in the plan.

If you plan on building an Orange Bullet, the key parts are readily available from Semroc.

Photo 1 shows my parts set ready for construction. You'll note that I've just finished filling the body tube seam in that shot. You may also notice that I've marked each body rib with a center line and with a nose cone edge line; these marks will help align the parts while being glued, ensuring that the ribs are straight and are located in the correct radial positions, and with the same length.

At this point I've also marked the body tube with the body rib/fin lines; we want to extend these lines onto the nose cone so that there is a clear alignment mark to match up with the body rib center lines when we glue these on later. Photo 2 shows the nose cone, and you might just be able to make out one of my body rib extension marks on the nose cone in the photo.

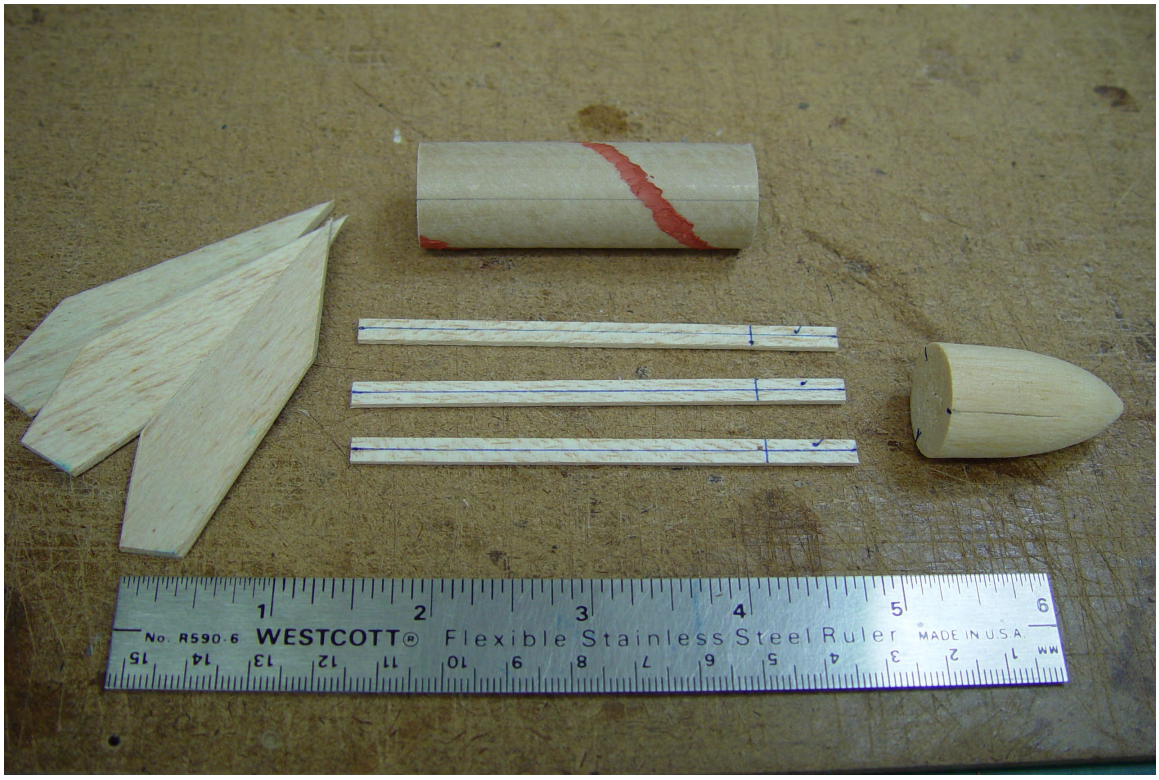

Photo 1: Orange Bullet Parts Set

Photo 2 also shows the BNC-30D nose cone with the shoulder removed; the Orange Bullet nose cone is permanently attached to the rocket by means of the body ribs, and if left in place, the shoulder will block the ejection gas venting ports, so the shoulder must be removed. I used a razor saw for this operation, being careful to keep the cut square to the base of the nose.

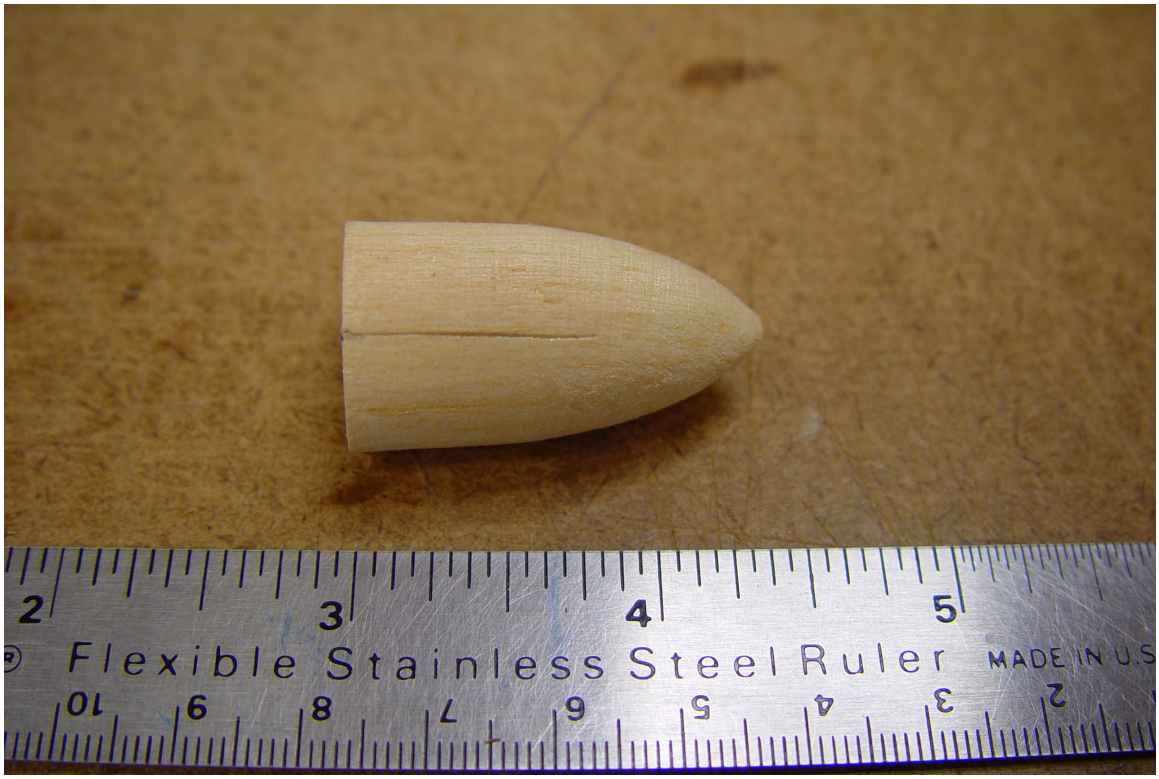

Photo 2: Nose Cone, Sans Shoulder

The body ribs were then glued in place; I chose to use contact cement for this step, making sure that my alignment lines were in correspondence. Photo 3 shows this step complete.

Make sure that you let the glue fully cure before moving onto the next step. Since the ribs interface with the nose cone on a compound curve, the rear portion of the rib is going to jut away at an angle tangent to the base of the nose. Later, when the ribs are pulled in to glue them to the body tube, there will be tension on the rib/nose cone glue joint, so you need to make sure the contact cement has fully cured to preclude the ribs from pulling away from the nose.

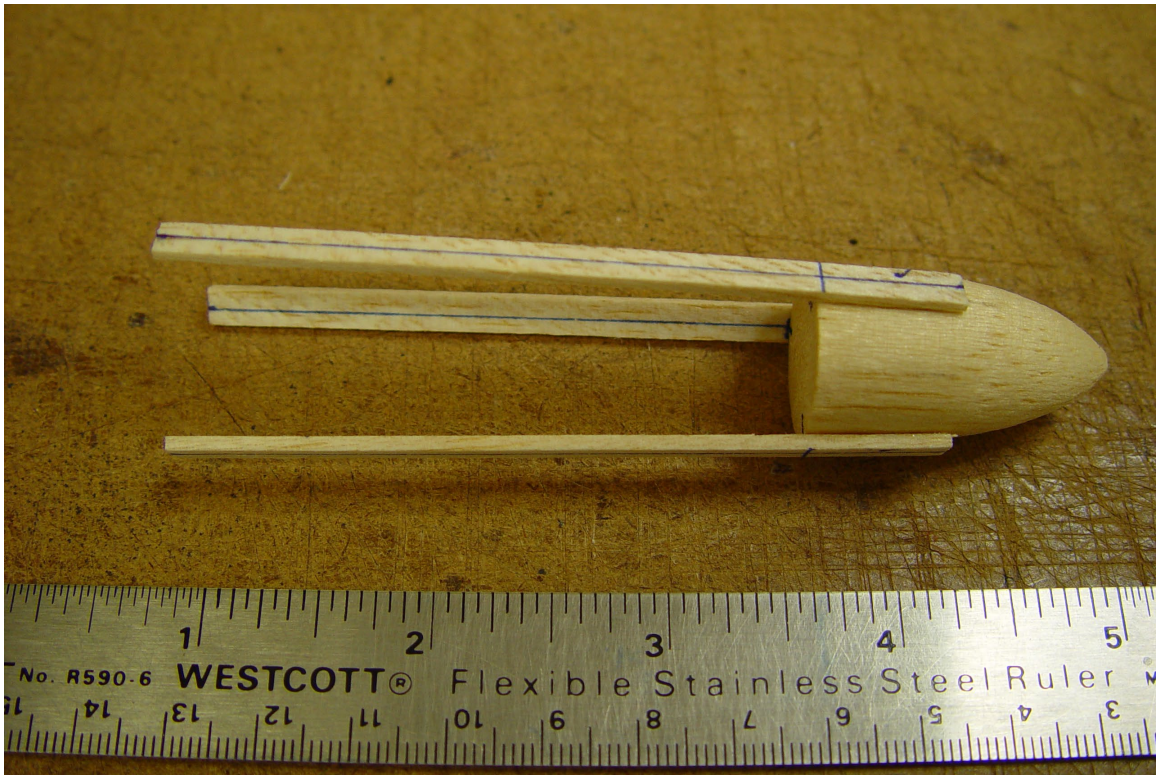

Photo 3: Body Ribs Attached

Once the contact cement had cured, the ribs were then glued to the body tube, as shown in Photo 4; I used Sig-Bond aliphatic glue for this step, and I used a few elastic bands wrapped around the assembly to make sure the ribs remained in full contact along the full length of the body tube while the glue was drying.

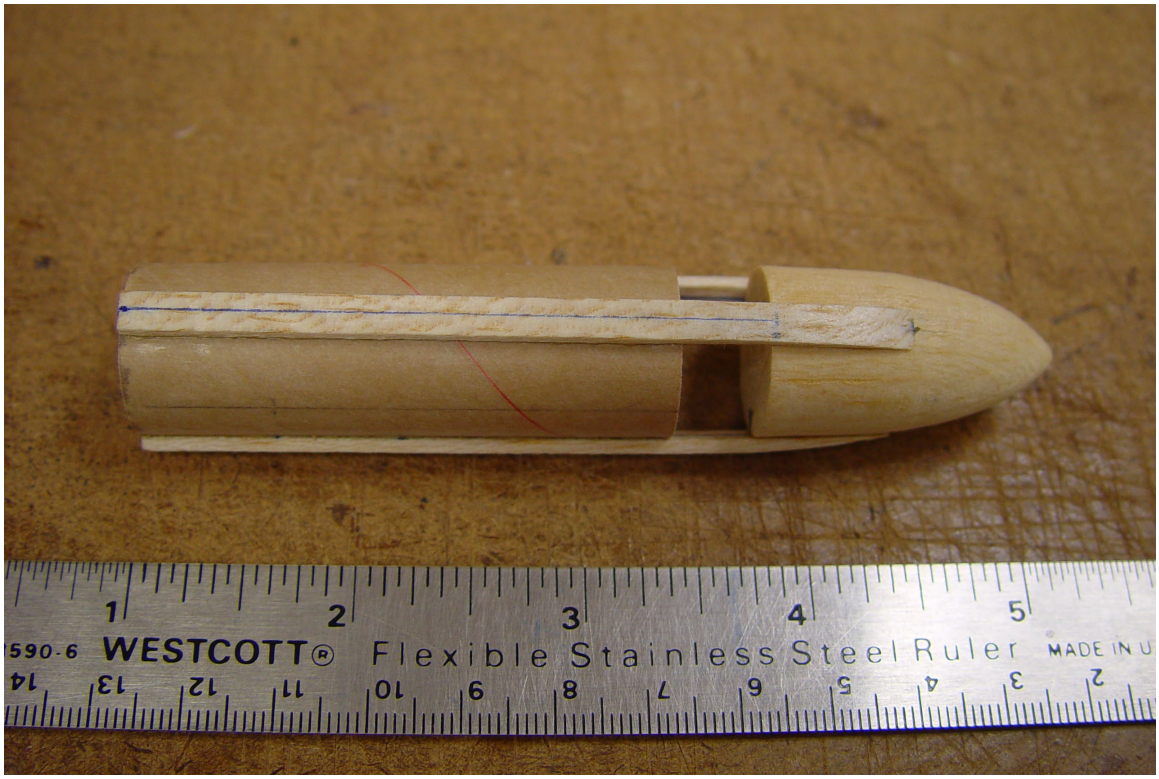

Photo 4: Airframe Assembly

Since I had doped and tissued my fins beforehand, the next step was ready to go; Photo 5 shows the Orange Bullet ready for the finishing stages. Photo 6 shows the final finished result.



Photo 5: Ready for Finishing

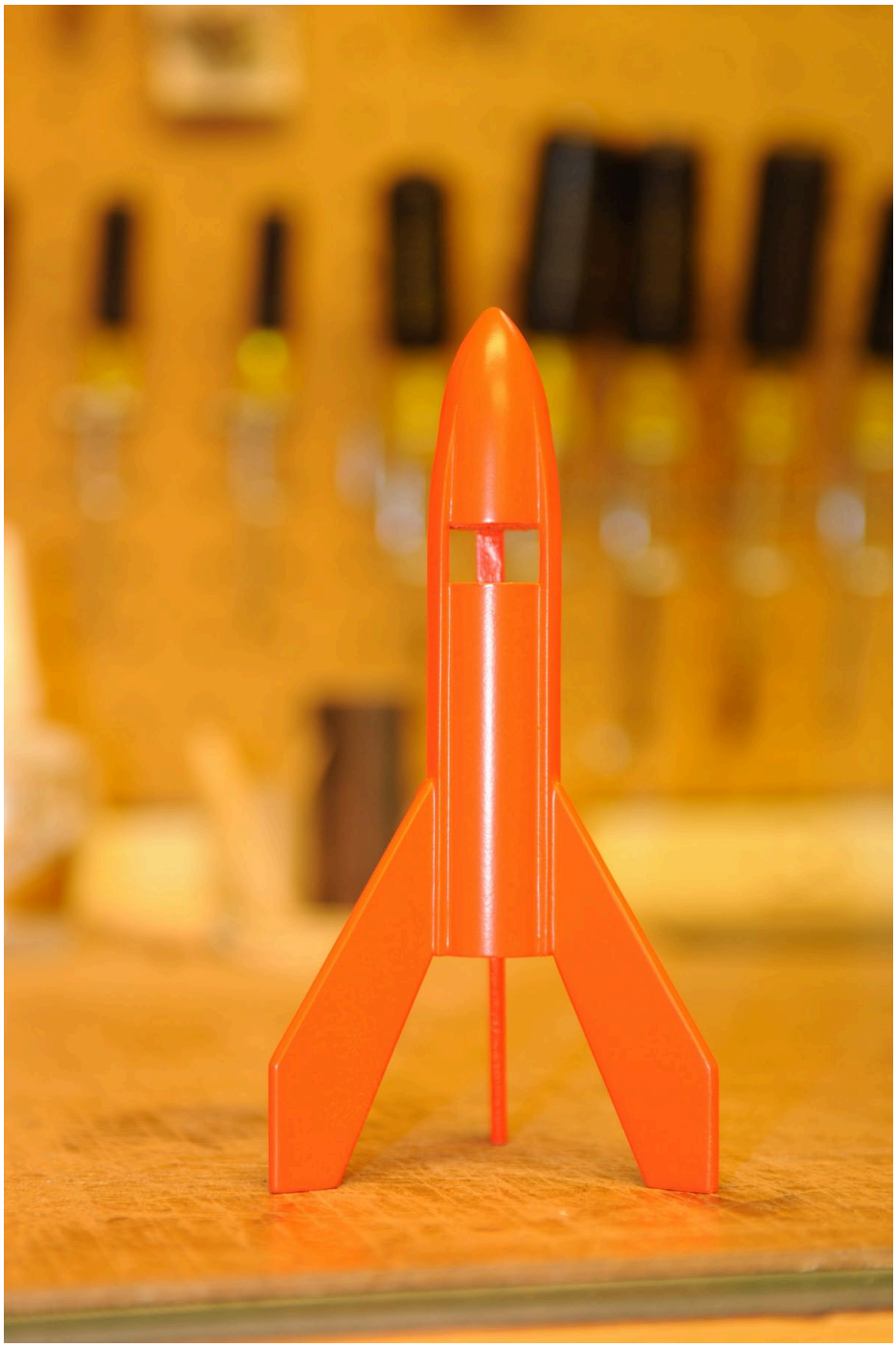

Photo 6: The Orange Bullet

And there you have it, an Orange Bullet clone. While the Orange Bullet is a diminutive and unimposing model it nevertheless had a giant impact on the hobby. It's a model (and patented invention) that helped launch Estes Industries into the kit business. The rest, as they say, is history. I hope you'll find an opportunity to build an Orange Bullet and add this little piece of history to your fleet.